LEGAL PROTECTIONS FOR ACADEMIC FREEDOM AND FEASIBILITY OF A COUNCIL OF EUROPE CONVENTION ON

ACADEMIC FREEDOM

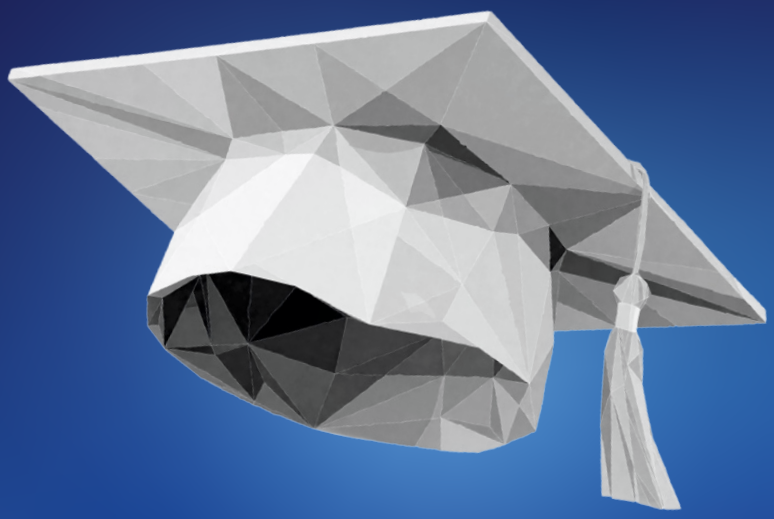

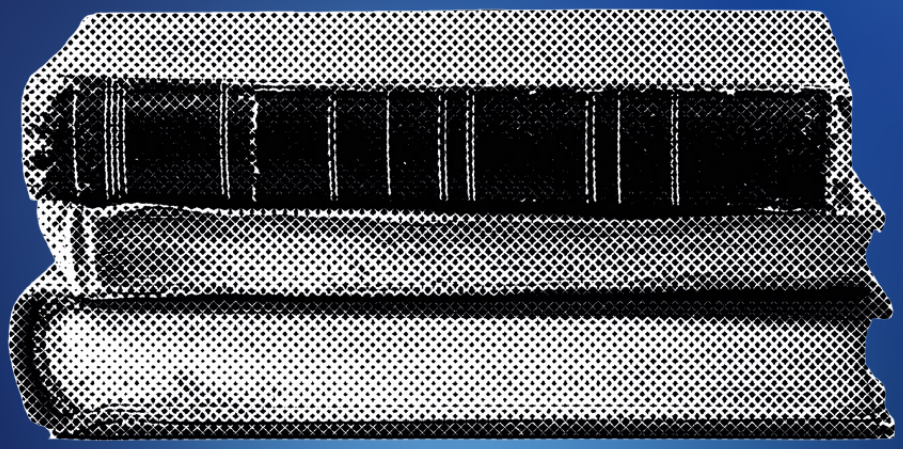

Council of Europe Standing Conference of Ministers of Education

27th Session
Podgorica, Montenegro
3, 4 December 2026

Presidence du / Presidency of
MONTÉNÉGRO / MONTENEGRO
Conseil de L'Europe / Council of Europe
11/2026 - 05/2027

COUNCIL OF EUROPE
CONSEIL DE L'EUROPE

French version:
PROTECTIONS JURIDIQUES DE LA LIBERTÉ ACADÉMIQUE ET FAISABILITÉ D'UNE CONVENTION DU CONSEIL DE L'EUROPE SUR LA LIBERTÉ ACADÉMIQUE

The opinions expressed in this work are the responsibility of the author(s) and do not necessarily reflect the official policy of the Council of Europe. All requests concerning the reproduction or translation of all or part of the document should be addressed to the Directorate of Communications (F-67075 Strasbourg Cedex or publishing@coe.int).

Cover design: Luna Lazzarini Graphic Design
Photo: Magnific, Council of Europe gallery
Layout: Luna Lazzarini Graphic Design

Council of Europe, November 2026

TABLE OF CONTENTS

EXECUTIVE SUMMARY 4

INTRODUCTION 8

Scope and approach 10
Academic freedom, democracy and the rule of law 12

CURRENT CHALLENGES TO ACADEMIC FREEDOM IN EUROPE AND BEYOND 14

Political and administrative control 16
Employment, discipline and legal harassment 17
Funding, evaluation, accreditation and commercialisation 18
Research security, digital pressure and transnational repression 19
Campus protest, institutional speech and equality duties 20
Student academic freedom 21
Implications for the present report 21

ACADEMIC FREEDOM IN THE HUMAN RIGHTS FRAMEWORK 22

International human rights and UNESCO standards 23
The Convention and related case law 26
Council of Europe standards 27
Implications for the present analysis 29

DOMESTIC IMPLEMENTATION AND PROTECTION 30

National recognition and domestic legal operation 32
Institutional autonomy and effective control 33
Scope of protection across institutions and academic roles 34
Remedies, review and timing 35
Implications for a Council of Europe instrument 36

FEASIBILITY AND ADDED VALUE OF A COUNCIL OF EUROPE CONVENTION 37

Feasibility question and assessment criteria 38
Available options 39
Added value of a specialised human rights convention 40
Scope and substantive content of a convention 41
Obligations, safeguards and limitations 44
Monitoring, implementation and follow-up 45
Relationship with existing instruments and avoidance of duplication 46
Issues requiring further consideration in drafting and procedural recommendation 47

CONCLUSIONS 49

EXECUTIVE SUMMARY

Pressure on independent institutions and open public debate across Europe has increased the urgency of protecting academic freedom, which preserves the conditions through which knowledge can be produced, tested and communicated without improper interference.

Every person may exercise academic freedom through research, teaching, learning and academic discourse, whether within an academic institution or independently. The exercise of that freedom may result in the examination of official claims, identification of institutional failure and development of evidence on which public institutions and civil society may rely. When political control, institutional dependence or fear of retaliation narrows the exercise of academic freedom, the resulting harm is not confined to the individuals directly affected, or institutions in which the activity is undertaken. It weakens independent scrutiny, public trust and the practical exercise of other rights. Academic freedom therefore forms part of the human rights and rule of law infrastructure of democratic societies alongside judicial independence, media freedom and civic space, and should receive correspondingly strong legal and institutional protection.

Against that background, this report assesses existing legal protections and the feasibility and added value of a Council of Europe convention specifically protecting academic freedom as an individual human right, and institutional autonomy as a condition of its exercise within higher education and research institutions. The report concludes that while important aspects of academic freedom already receive protection through a range of rights, the current framework remains fragmented, uneven and often too slow to preserve academic activity before it is lost. A specialised convention is legally and institutionally feasible and would add value by recognising the right in a binding instrument, establishing common duties, safeguards and rights-focussed monitoring.

The protection of academic freedom falls directly within the Council of Europe's human rights, democracy and rule of law mandate because it safeguards individual rights and democratic scrutiny. The Reykjavík Principles expressly include academic freedom within freedom of expression, while the New Democratic Pact for Europe process places its protection among the safeguards needed for democratic resilience. Recommendation CM/Rec(2012)7 recognises academic freedom and institutional autonomy as intrinsic values of higher education and places responsibility on public authorities to establish and maintain the conditions in which they can be exercised.

In 2020, the Parliamentary Assembly identified the absence of regularly monitored information and a legally binding agreement on academic freedom as reasons why abuses continued without an adequate response, supported a European convention and asked that the need and feasibility of a binding instrument be assessed. The Committee of Ministers subsequently noted the possibility of such an assessment. The Council's Academic Freedom in Action initiative has renewed consideration of stronger legal protection and monitoring.

The Council, other international organisations, and civil society have documented growing pressures on academic freedom, arising through censorship and direct coercion of academic staff, students and researchers, as well as through decisions about employment, funding and institutional governance that can restrict academic activity without formally prohibiting it. Fear of losing employment, funding or institutional support can cause scholars and students to self-censor before any formal restriction is imposed. Legal and institutional safeguards must therefore operate before the academic activity or opportunity is lost.

Although the European Convention on Human Rights does not contain a freestanding guarantee of academic freedom, important aspects receive binding protection through Article 10 and related rights concerning education, association, private



life, non-discrimination and effective remedy. These rights require non-interference and may require positive protective measures. The Court has given particular weight to expression connected with academic expertise, institutional criticism and matters of public interest, and has protected related interests involving access to research material, procedural safeguards and academic mobility. The International Covenant on Economic, Social and Cultural Rights, UNESCO standards and existing Council of Europe instruments provide more express recognition of the relationship between individual academic freedom, scientific research and institutional autonomy. However they do not establish a comprehensive and binding Council of Europe guarantee requiring national authorities and institutions to identify academic freedom whenever protected academic activity is affected.

At the national level, constitutional and legislative guarantees relating to academic freedom exist in many member States, but differ in their scope, legal force and relationship with institutional autonomy. In practice, disputes may be resolved through employment, administrative, education or other areas of law without any express assessment of academic freedom. Because information about these disputes is held separately by different bodies, apparently isolated cases may not be recognised as evidence of a wider deterioration in academic freedom. Continued reliance on the existing framework would preserve important protections but leave these weaknesses substantially unchanged. Enhanced guidance and monitoring could improve information and institutional attention, but would not create binding obligations or require domestic procedures to apply a common standard. A specialised convention therefore offers the greatest added value by consolidating existing principles and making academic freedom legally visible at the point where decisions affecting it are taken.

The proposed convention should recognise academic freedom as an individual human right of every person. It should protect research, teaching, learning, academic expression and participation in academic life whether undertaken within an academic institution or independently. Institutional autonomy should also be expressly protected, while remaining subject to public accountability and the rule of law, because it enables that right to be exercised within higher education and research institutions. Parties should guarantee academic freedom in law, refrain from unjustified interference and take appropriate measures against foreseeable interference by institutions and third parties. The instrument would preserve legitimate public regulation of higher education and research, and academic freedom should not shield breaches of professional standards

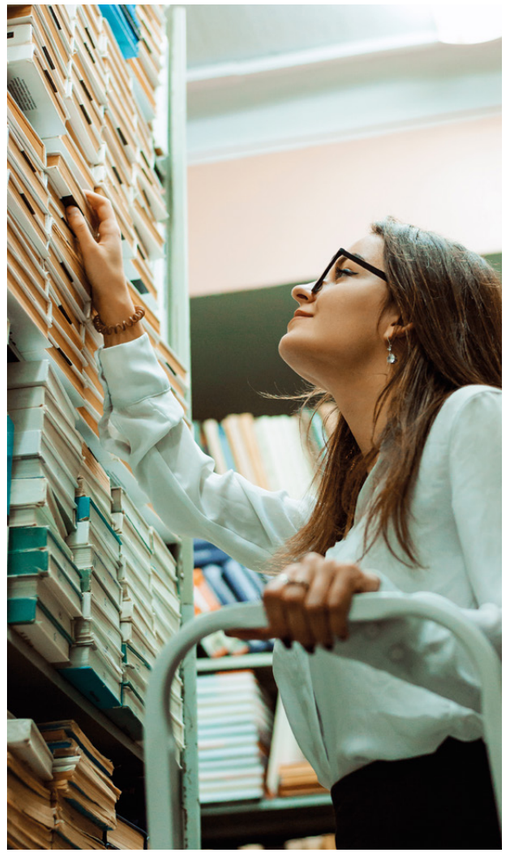

of research integrity or ethics. Restrictions, including measures adopted for research security, should be prescribed by law, directed towards a legitimate aim, necessary and proportionate in a democratic society, non-discriminatory and open to effective review. Periodic reporting by Parties, independent human rights-expert assessment, structured stakeholder participation and political follow-up through a Committee of the Parties or equivalent body would allow systemic conditions to be examined across Europe.

The feasibility assessment is positive because existing law and policy already provide the principal legal parameters for drafting, while established Council of Europe treaty practice provides workable models for domestic implementation, human rights expert monitoring and intergovernmental follow-up. This report supports a decision to proceed to drafting a human rights instrument, with higher education expertise contributing to institutional design and implementation and with structured consultation involving national human rights bodies, civil society and academic communities.

CO-ORDINATION

The preparation of this report, as part of the Council of Europe project on the Democratic Mission of Higher Education, was coordinated by the Education Department of the Council of Europe.

Villano Qiriazi
Head of Department

Catherine Dolgova-Dreyer
Head of Unit

Jelena Drča
Project Manager

Eva Piu
Assistant

AUTHOR

This report was prepared by:

Kirsten Roberts Lyer
Professor and Chair of the Human Rights Programme, Central European University

The report builds on the publications and discussions of the Expert Working Group on the Democratic Mission of Higher Education.

ACKNOWLEDGMENTS

The Council of Europe wishes to thank the members of the Steering Committee for Education (CDEDU) and its Subgroup on Higher Education for their guidance and support throughout the development of the project on the Democratic Mission of Higher Education, particularly its work on protecting and promoting academic freedom under the initiative Academic Freedom in Action.

The Council of Europe also extends its appreciation to the members of the Expert Working Group on the Democratic Mission of Higher Education - Denise Roche, Zoltán Rónay, Peter Maassen, Gergely Kováts, Hans de Wit, Katrin Kinzelbach, Paola Mattei, Ninoslav Šćukanec Schmidt, Rose Anne Cuschieri, and Susan Wright - for their valuable contributions to the discussions that informed the preparation of this report.

The Council of Europe also wishes to thank the policymakers, academics, student representatives, civil society organisations, international organisations and legal experts who shared their perspectives during the consultations, contributing to the discussions on the protection of academic freedom and the possible development of a Council of Europe convention and other strengthening of legal protections for academic freedom at European level.

INTRODUCTION

> Defending academic freedom cannot be the sole responsibility of the academic community.
>
> **Villano Qiriazi**
>
> Foreword, Council of Europe, *The Erosion of Academic Freedom in Europe* (Strasbourg: Council of Europe, 2025), pp. 5–6.



Academic freedom is part of the human rights infrastructure of democratic societies. It protects the conditions under which every person, including scholars, researchers and students, can acquire, develop, test, transmit and contest knowledge through research, teaching, learning, publication, academic discourse and public engagement.

It is a human right that is essential to democratic societies and the rule of law. Academic freedom promotes access to accurate information on complex or contested issues, and together with research integrity and ethics, supports safeguards against manipulation, historical distortion, and scientific and cultural biases. It supports evidence-based inquiry, debate, and policymaking, and supports the exercise of other rights. Pressures on academic freedom thus threaten society as a whole.

This places the issue of academic freedom firmly within the Council of Europe's New Democratic Pact agenda: democratic security depends on institutions capable of producing, testing and communicating knowledge without improper pressure. Academic freedom thus merits robust responses at the national, regional, and global levels. Legal, convention-based recognition of this right, particularly by the Council of Europe, will strongly support its greater protection.

The need for greater protection of academic freedom through a binding instrument has been recognised within the Council of Europe. PACE Resolution 2352 (2020) stated that in the absence of regularly monitored data and a legally binding international agreement, abuses continue without adequate response. It identified the need for a European convention on the protection of academic freedom and institutional autonomy, together with instruments for information gathering, monitoring and assistance.[1] That position is even more pertinent than when the Resolution was published, as monitoring has documented continued pressure on higher education and research through direct coercion, institutional control, legal intimidation, digital harassment and weakened conditions of autonomy. Further, while there is substantial international and European material on the meaning of academic freedom, there is no agreed binding regional definition that Council of Europe member States must apply in law, policy and institutional practice. That absence means academic freedom, despite being recognised in principle at the domestic level, often disappears in practice when disputes are resolved as employment, funding, accreditation, security, immigration, discipline or internal governance matters.

Against that background, this report assesses the feasibility and added value of a specialised Council of Europe convention on academic freedom and institutional autonomy. The proposed model is a dedicated Council of Europe human rights convention with domestic implementation, periodic reporting, independent expert review, Committee of the Parties-style follow-up, structured input from academic communities and civil society, and national focal points or equivalent bodies.

The Council of Europe is uniquely placed to develop this Convention. Academic freedom sits at the intersection of Convention rights, democratic security, education policy, institutional independence and the rule of law.

The question for the Council of Europe is therefore whether that recognition should now be translated into a binding regional standard, with duties, safeguards and monitoring capable of protecting academic freedom before the conditions for independent academic work have already been narrowed.



SCOPE AND APPROACH

The present report combines a policy and legal assessment for Council of Europe member State policymakers, senior officials and actors involved in human rights and democratic governance, higher education, and research.

It draws on desk research and synthesis of the extensive legal, policy and monitoring material in the field of academic freedom. This report does not assess the situation in any individual member State. Domestic and case-law material is used solely to identify recurring legal and institutional patterns relevant to standard-setting.

As regards the definition of academic freedom used in this report; while there is no internationally agreed binding legal definition of academic freedom as noted above, the following definition is used, which draws on and develops existing international and European human rights materials.

The report's structure is built on the basis that academic freedom is under serious pressure, but existing protections do not sufficiently recognise it as a human rights issue, nor protect it, including that they do not always require authorities or institutions to assess measures affecting higher education and research against academic freedom itself.

Section 2 identifies the current patterns of interference and the institutional channels through which academic freedom is most often impaired. Section 3 examines the existing human rights framework and explains why it provides substantial foundations but insufficient protection. Section 4 considers how protection operates in domestic systems, including where ordinary legal routes fail to provide clear duties, safeguards, timely remedies or monitoring. Section 5 assesses whether a Council of Europe convention would be feasible and what legal value it would add. Section 6 contains the report's conclusions.

DEFINING ACADEMIC FREEDOM AND INSTITUTIONAL AUTONOMY

Academic freedom means the human right to acquire, develop, transmit, apply, and engage with a diversity of knowledge and ideas through research, teaching, learning, and discourse. It is exercised individually or collectively, within or outside of academic communities, including through participation in professional or representative academic bodies.

It includes, in particular, the freedom to research (including freedom to choose topics and methods, and research partners), to teach (including pedagogical choices, content and materials), to learn, to seek, receive and impart information and ideas across frontiers (including through digital and physical media), and to disseminate and publish research results in any medium; to engage in intramural and extramural expression connected to academic activity, expertise or institutional affairs, including institutional and system criticism; to participate in academic self-governance and institution-level decision making and professional bodies; and to collaborate domestically and internationally, including participation in and organisation of scholarly discussion and debate, including seminars, colloquia, conferences, peer review and other academic fora. The particular freedoms and safeguards applicable in each case depend on the activity undertaken and, where relevant, the person's institutional role.

These freedoms must be respected and protected against undue interference, censorship, coercion and retaliation by public authorities, academic institutions and other actors. They are exercised subject to applicable professional standards, research ethics and the rights of others. Any restriction must be consistent with international human rights law, including the requirements of legality, a legitimate aim, necessity and proportionality, and be applied in an objective, transparent and non-discriminatory manner, without discrimination based on viewpoint, political or ideological opinion, or the anticipated conclusions of research, and be subject to due process and access to effective remedies.

Institutional autonomy is a necessary enabling condition for the effective enjoyment of academic freedom within higher education and research institutions, and denotes the academic, organisational, financial and staffing self-governance of higher education and research institutions, exercised consistently with academic freedom, including that of staff, researchers and students, and within the framework of public accountability and the rule of law.

ACADEMIC FREEDOM, DEMOCRACY AND THE RULE OF LAW

Before considering current challenges affecting academic freedom, it is important to emphasise the broader framework in which academic freedom sits. Often addressed as a sectoral issue, academic freedom is increasingly recognised as an essential component of democratic and rule of law-abiding States.[2]

Democratic decision making often turns on knowledge produced outside the immediate control of public authority. People exercising academic freedom, such as scholars and students, may test official claims, examine institutional failure, challenge received accounts and develop evidence that informs public debate, law, policy and administration. Where those activities are chilled by political pressure, institutional dependence or fear of retaliation, the harm reaches beyond the persons directly affected or the institution. Public authorities, courts, journalists, civil society and affected communities lose one of the routes through which power can be scrutinised and rights made usable in practice.[3]

For the rule of law, a further relevant connection to academic freedom can be found in the institutional function of higher education and research. Universities educate many of the professions that interpret, apply and challenge law. They also produce scholarship that evaluates key rule of law areas including legislation, administration and adjudication, policing and detention, and frameworks for equality, anti-corruption and rights protection. Where institutions are captured or intimidated, this important source of professional formation and external rule of law scrutiny is weakened.[4]

Academic freedom also affects the practical exercise of other rights because evidence and expertise often determine whether those rights can be claimed or enforced. Scholarly research documents issues such as discrimination, environmental harm, public health risk, technological abuse, migration practices which can later inform litigation, legislation, oversight and public advocacy. Where academic freedom is limited, freedoms and rights of expression, education, equality, participation in science or access to information are weakened.

The issue is institutional as well as individual, as academic freedom helps protect the conditions under which democratic societies retain independent sources of knowledge. For Council of Europe purposes, this places academic freedom firmly within the same constitutional field as judicial independence, media freedom, civil society space and professional independence, as each limits the concentration of public and private power by preserving institutions capable of scrutiny. The next section will consider some of the specific current challenges to academic freedom.

> *Academic freedom helps protect the conditions under which democratic societies retain independent sources of knowledge.*



CURRENT CHALLENGES TO ACADEMIC FREEDOM IN EUROPE AND BEYOND

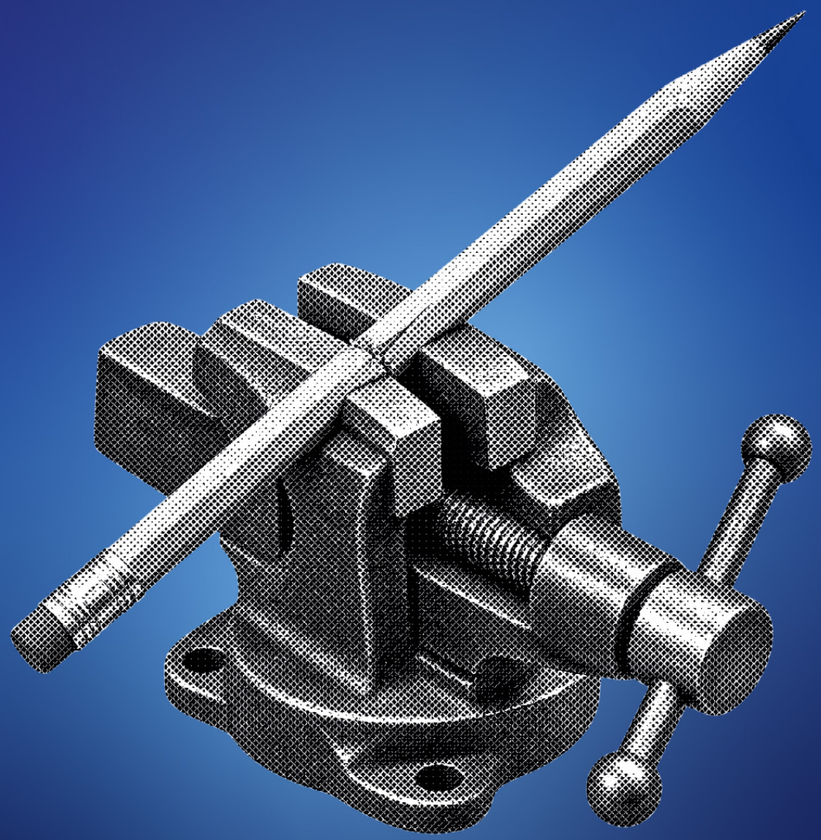

International and regional monitoring bodies have reported increasing pressure on academic freedom in recent years. The Council of Europe's 2025 report *The Erosion of Academic Freedom in Europe* identified political interference, legal intimidation, censorship, online harassment and weakened institutional conditions as current risks to academic freedom in Europe.[5]



The Academic Freedom Index Update 2026 recorded declines in 50 countries and territories over the preceding decade, with improvements in only nine.[6] Scholars at Risk recorded 395 attacks on scholars, students and institutions in 49 countries and territories between 1 July 2024 and 30 June 2025, while emphasising that its data is illustrative.[7] The European Parliament's Academic Freedom Monitor 2025, published in 2026, records continuing concern across the European Union despite comparatively strong formal protections.[8]

The interferences described in this section take two broad forms. Some are direct, such as prosecution, dismissal, detention, programme closure, censorship or police action. Others operate through the systems that organise higher education and research including governance, funding, accreditation, employment, complaints, mobility, research security and digital infrastructure. As will be described further below, this second category is important because it may appear technical or routine while still determining whether academic work can continue in practice.

POLITICAL AND ADMINISTRATIVE CONTROL

Political and administrative pressure on academic freedom often operates through governance, and most directly impacts university autonomy.

Leadership appointments, governing-body composition, programme approval, accreditation, budget control and ministerial oversight often determine who has practical authority over teaching and research. State exercise of these powers raises academic freedom concerns when they are used to align institutions with political or ideological preferences, weaken academic self-governance, or remove meaningful academic control over teaching, research and institutional criticism.[9]

University autonomy can also be impeded in subtle and indirect ways. The autonomy of a university can erode without the imposition of a formal ban on specific content. A university can retain legal personality while losing control over staffing, finances, academic bodies, research priorities or programme authorisation.[10] A ministry or government-appointed leadership model, politically conditioned accreditation or funding dependent on state priorities can shift decision-making sufficiently for researchers to avoid work that carries political or financial risk. It is notable in this regard that the European University Association's Autonomy Scorecard separates organisational, financial, staffing and academic autonomy illustrating that pressure can arise through any of those routes.[11]

The absence of clear legal guarantees can create risk, because it enables interference through otherwise lawful institutional or administrative decisions. However, as the Council of Europe's 2025 *The Erosion of Academic Freedom in Europe* report emphasises, legislation can both support and reduce academic freedom, and emphasises that restrictions are active, passive, direct and indirect, as discussed further in Section 4.[12]



The autonomy of a university can erode without the imposition of a formal ban on specific content.



EMPLOYMENT, DISCIPLINE AND LEGAL HARASSMENT

Academic freedom depends heavily on the conditions under which academic work is performed.

Retaliation in academic settings often works through the decisions that determine whether a person can continue their work. A scholar can remain formally free to speak while losing their contract renewal, supervision or institutional sponsorship that they need to remain in academia. The effect is especially acute for those with **precarious employment** conditions or short-term contracts, as well as early-career researchers, where the loss of the next opportunity is as decisive to their career as dismissal.[13] **Disciplinary and complaints systems** can also become instruments of pressure when they are abused, or do not distinguish misconduct from protected academic activity, and/or lack adequate procedural protections.[14]

Legal harassment is another area where harm is often found within the process itself. The Council of Europe's 2024 Recommendation on countering Strategic Lawsuits Against Public Participation (SLAPPs) addresses legal actions threatened, initiated or pursued to harass or intimidate targets and restrict public participation.[15] The Council of Europe's SLAPPs Academic Freedom Insights brief records that legal threats against scholars include civil proceedings, criminal prosecutions and regulatory sanctions, and that the harm often lies in the burden of the process itself.[16] CASE data cited in that brief identify 1,049 SLAPP suits filed in 41 European countries between 2010 and 2023; 42.5 per cent were brought by business interests, 35.5 per cent by politicians, and 21.7 per cent involved criminal law. Scholars, particularly those who contribute to public debate, face vexatious defamation claims, criminal complaints, threatened litigation or other forms of legal intimidation, especially when working on politically sensitive issues.

FUNDING, EVALUATION, ACCREDITATION AND COMMERCIALISATION

Funding, evaluation and accreditation determine the structural conditions under which teaching, research, publication and institutional life can be maintained.

Public authorities and regulators set policy priorities, allocate resources, require accountability and maintain standards in higher education and research. Academic freedom concerns arise where those systems reward political or commercial conformity, penalise lawful academic activity, or make certain fields of inquiry difficult to sustain. Politically sensitive research may remain formally possible while in practice it loses critical components needed to carry out the work such as core funding, laboratory access, fieldwork support or eligibility for future grants.[17]

PACE Resolution 2352 (2020) provides direct support for this analysis. It identifies the **commodification of higher education and the commercialisation of knowledge** as threats to academic freedom and institutional autonomy, warning that external funders redirect research towards profit or revenue flows and limit publication of results, and calls for adequate public funding, transparent funding mechanisms and clear provisions to prevent threats arising through public or private financing schemes.[18] The source of funding itself is not determinative, since dependence on public or private funding may constrain academic freedom. A narrowly defined contractual delay to protect patentability may be compatible with academic freedom but a sponsor veto over publication, control over the framing of results, or suppression of adverse findings directly affects academic judgement and the freedom to publish. Institutional incentives can produce comparable pressure where researchers avoid work likely to jeopardise a relationship with a major donor, partner, government or revenue stream.[19] The Council of Europe's 2025 *The Erosion of Academic Freedom in Europe* report identifies the related issue of **dependence on private funding** as a potential constraint on academic freedom where funders influence research questions asked, or the results published. The European Parliament Monitor similarly treats non-public funding and the absence of transparent funding guidelines as sources of pressure on academic freedom.[20]

Quality assurance and accreditation support academic freedom when they protect standards, transparency and increase public trust in higher education. However, these procedures can also be misused to narrow the space for teaching and research by using criteria that are vague, politically conditioned, inconsistently applied or exercised to pressure institutions over areas that should remain within their discretion such as curricula, staffing, and research priorities.[21]

Research evaluation and metrics raise a related risk because assessment systems influence careers, funding streams, disciplinary status and the kinds of outputs treated as valuable. Competitive funding, impact requirements, rankings and publication metrics can encourage quality and public relevance, while also steering researchers away from critical, long-term, interdisciplinary, local-language, negative-result, theoretical or politically sensitive work.



RESEARCH SECURITY, DIGITAL PRESSURE AND TRANSNATIONAL REPRESSION

Research security has become an increasingly important part of the academic freedom debate in recent years.[22]

States and universities have legitimate responsibilities to address research security issues including espionage, cyber threats, unlawful technology transfer, foreign interference and other serious harms. Research security measures may protect academic freedom against such harms, but become problematic for academic freedom when they control lawful academic content, restrict collaboration, stigmatise scholars by origin or opinion, impose disproportionate monitoring or chill inquiry in sensitive fields. **Academic boycotts, sanctions, divestment demands** and restrictions on international collaboration also arise in disputes involving conflict, security, foreign interference and institutional complicity.[23]

Digital pressure now forms part of ordinary academic life as scholars frequently teach, publish, debate and engage with the public online, and students engage through digital systems. These spaces have exposed academic communities to a range of threats including surveillance, doxxing, cyber-attacks, disinformation, platform-mediated silencing and automated or AI-enabled monitoring.[24] The Council of Europe 2025 *The Erosion of Academic Freedom in Europe* report records that academics working on sensitive or politically charged subjects face threats, harassment and social-media attacks leading to self-censorship. The European Parliament Monitor similarly identifies social-media attacks as a growing risk because they can silence dissent, deter public engagement and induce institutional risk-management responses that restrict lawful academic activity.[25]

Transnational repression is an area where scholars face threats and intimidation, but which remains under-recognised in academic freedom analysis. PACE Resolution 2509 (2023) describes transnational repression as a growing threat to the rule of law and human rights. As the Academic Freedom Insights brief Transnational Repression and Threats to Scholars (2025) highlighted, scholars, researchers and students in Europe face a range of intimidatory tactics including surveillance, threats to family members abroad, coercion by proxy, cyber operations, spyware, pressure from foreign public authorities or state-linked actors, travel restrictions or foreign-agent labelling because of their research, teaching, publication or public engagement. These cases are often dealt with as personal safety, immigration, foreign policy, platform moderation or ordinary security administration, leaving the academic freedom dimension without clear protection.[26]

CAMPUS PROTEST, INSTITUTIONAL SPEECH AND EQUALITY DUTIES

Recent campus conflicts have highlighted that academic freedom issues related to campus protests are often treated as campus order issues.

Protest rules, speaker-event procedures, police involvement, and disciplinary action can affect academic freedom, as well as freedom of expression, freedom of association and access to education.[27] Universities and public authorities have responsibilities to protect safety, prevent unlawful harassment, maintain access to teaching and research, and safeguard the rights of others.[28] However, recent monitoring shows that campus protest disputes often become academic freedom disputes where restrictions are not based on concrete conduct, risk and impact, and institutions fail to distinguish unlawful harassment or exclusion from protected academic debate, association and institutional criticism.[29]



STUDENT ACADEMIC FREEDOM

Council of Europe, United Nations and UNESCO materials already treat students as part of the academic community for academic freedom purposes.

However, student-facing risks to academic freedom are often absorbed into issues of education, discipline, welfare or campus order procedures.[30] Responses to organised student action, including campus protests, raise academic freedom concerns where they are a response to a particular viewpoint, controversy, donor or political pressure, or where they are imposed without evidence, fair procedures and urgency that is proportionate to the risk.[31] International students have faced monitoring by foreign authorities or proxies, threats to family members abroad, travel restrictions or fear that classroom discussion and protest will be reported outside the host State.[32]

The distinctive student risk often arises from dependency on matters that rely on institutional discretion such as grades, supervision, laboratory and archive access, scholarships, accommodation, and future admission. Doctoral candidates and student researchers are particularly exposed because they are both learners and knowledge producers, often dependent on the same persons for assessment, supervision, funding and entry into the profession.[33]

IMPLICATIONS FOR THE PRESENT REPORT

The pressures described above do not always require a final sanction to be effective.

They often work through anticipated cost where a person exercising academic freedom avoids a topic, delays a publication, declines a collaboration, withdraws from public debate or cancels an event because the likely consequences are too high. The resulting chilling effect is one way self-censorship appears in academic life. It is also a structural effect of weak protection, where individual caution arises from credible exposure to professional, institutional, legal or personal cost.[34]

Many of these losses leave no formal record because the decision is not to act. They rarely appear in litigation or incident monitoring. Yet they matter because academic activity can be lost before any reviewable decision exists.[35] Institutional isolation makes this worse where the cost of defence is shifted onto the person, department or institution targeted, academic freedom remains formally recognised but becomes fragile in practice.[36] This section also identified a specific urgency for stronger protection, which is that many contemporary pressures operate before the legal system recognises that academic freedom is engaged. The next section considers whether the existing human rights framework gives academic freedom sufficient legal visibility before the academic opportunity is lost.

ACADEMIC FREEDOM IN THE HUMAN RIGHTS FRAMEWORK

No Council of Europe treaty, nor United Nations human rights treaty, contain a standalone provision explicitly guaranteeing academic freedom. There are important protections of academic freedom related interests through binding rights including freedom of expression, education, association, private life, non-discrimination, due process, effective remedy, and the freedom indispensable for scientific research and creative activity.[37] However, these instruments, while sufficient to support standard-setting, only protect academic freedom indirectly and unevenly. This section asks what existing human rights law already contributes to the protection of academic freedom. It shows that academic freedom is supported by expression, education, science, association, due process and related guarantees, but remains dependent on adjacent rights and dispersed standards, and explains why this supports the development of standalone recognition in Council of Europe treaty law.



INTERNATIONAL HUMAN RIGHTS AND UNESCO STANDARDS

International human rights law provides several foundations for academic freedom related rights. Article 19 of the International Covenant on Civil and Political Rights (ICCPR) protects the right to hold opinions and the right to seek, receive and impart information and ideas of all kinds, regardless of frontiers.

For academic work, this protection is central, as research, teaching, publication, institutional criticism and public engagement all depend on the ability to seek information, test ideas and communicate findings without undue interference.[38] The Human Rights Committee's interpretation of Article 19 emphasises the social and democratic function of freedom of expression and the protection of expression concerning public affairs. Academic speech often has precisely that character. Scholars may be speaking within a field of research, contributing expertise to public debate, criticising institutional arrangements or challenging official accounts.[39] Article 19 therefore protects an important part of academic freedom, which is mirrored in the protection provided under Article 10 ECHR, discussed further below.

The International Covenant on Economic, Social and Cultural Rights (ICESCR) provides two further foundations. Article 13 protects the right to education, while Article 15 protects the right to take part in cultural life, to enjoy the benefits of scientific progress and its applications, and the freedom indispensable for scientific research and creative activity. Under these core international human rights instruments, academic freedom is thus tied to expression, education, science, culture and the public's access to knowledge.[40]

There are two important interpretations of the ICESCR that are particularly relevant to the scope of academic freedom. The Committee on Economic, Social and Cultural Rights made the connection with education explicit in its General Comment No. 13. It treats members of the academic community, individually

and collectively, as free to pursue, develop and transmit knowledge and ideas through research, teaching, study, discussion, documentation, production, creation or writing. It also states that enjoyment of academic freedom requires institutional autonomy and identifies denial of academic freedom of staff and students as a possible violation of Article 13.[41] This formulation reflects a general understanding of academic freedom.

The Committee's General Comment No. 25 on science and economic, social and cultural rights gives additional support for the scientific and research dimension of academic freedom. Article 15(3) ICESCR itself requires States Parties to respect "the freedom indispensable for scientific research and creative activity" and General Comment No. 25 elaborates that obligation as part of the right to participate in and enjoy the benefits of scientific progress.[42] The Committee defines science broadly to include the natural and social sciences and to cover both the process of inquiry and its results. It rejects a rigid distinction between professional scientists and the general population and recognises the right of every person to participate in scientific progress and in decisions concerning its direction, including through citizen science. This is significant for academic freedom because research depends on freedom from undue influence, the ability to formulate research questions, define aims and methods, establish or work within autonomous research institutions, and communicate findings to policymakers and the public. Restrictions may be imposed only where they comply with Article 4 ICESCR, including legality, pursuit of the general welfare in a democratic society, necessity and proportionality, and must be compatible with applicable ethical and human rights standards.

UNESCO's 1997 Recommendation concerning the Status of Higher-Education Teaching Personnel defines academic freedom in operational terms, including freedom of teaching and discussion, freedom to carry out research and disseminate and publish results, freedom to express opinions about the institution or system in which one works, freedom from institutional censorship, and freedom to participate in professional or representative academic bodies.[43] This connects individual freedom with institutional conditions. The Recommendation treats institutional autonomy as the institutional form of academic freedom and calls on public

> *Under these core international human rights instruments, academic freedom is thus tied to expression, education, science, culture and the public's access to knowledge.*

authorities to protect higher education institutions from threats to autonomy coming from any source. That wording recognises pressure from the State as well as from other actors.[44] The 2017 UNESCO Recommendation on Science and Scientific Researchers reinforces this approach in relation to scientific freedom, responsibility, safety, enabling environments and the public good.[45] A further recent development is the revision process for the 1966 ILO/UNESCO Recommendation concerning the Status of Teachers and the 1997 Recommendation concerning the Status of Higher Education Teaching Personnel. The non-binding 2025 Santiago Consensus, adopted at the UNESCO–Chile World Summit on Teachers, supports teachers' pedagogical and professional autonomy and reaffirms the need to revise the 1966 and 1997 Recommendations.[46] While any revised recommendation would remain non-binding within the relevant standard-setting framework, the process is significant because it confirms that academic freedom, institutional autonomy, employment conditions and professional safeguards are now being reconsidered in light of contemporary pressures on teaching and higher education. It also reinforces the case that a Council of Europe convention would build on, rather than duplicate, an evolving international acquis.

The 2024 report of the United Nations Special Rapporteur on the right to education is an important step in the normative consolidation of academic freedom in international human rights law. The Special Rapporteur proposed that academic freedom be considered an autonomous human right grounded in existing international law, including the rights to education, scientific research and participation in scientific progress, freedom of opinion and expression, cultural participation, association, assembly, privacy, public participation and movement.[47]



The report is significant because it treats academic freedom as a universal human right, rather than a professional freedom limited to education personnel or traditional institutions. It recognises researchers, educators and students, at all levels of education, as entitled to that right and describes it as covering the acquisition, development, transmission, application and contestation of knowledge through research, teaching, learning and discourse. It also recommends constitutional and legal recognition of academic freedom as an autonomous right at national level and draws attention to the Principles for Implementing the Right to Academic Freedom.[48] The Principles are particularly useful for present purposes because they translate the proposed recognition into operational safeguards.

Regional practice outside of Europe also supports the operational framing of academic freedom. The Inter-American system has treated academic freedom and university autonomy as linked to freedom of expression, knowledge production and peaceful assembly in university contexts.[49] This is useful comparative evidence that regional human rights systems increasingly treat academic freedom as a democratic and institutional guarantee, rather than a purely professional norm.[50] The Africa Coalition for Academic Freedom announced 2025 research initiatives to examine the historical roots and current status of academic freedom in Africa and to prepare work towards African principles. Council for the Development of Social Science Research in Africa (CODESRIA) also convened the 2025 conference Academic Freedom in Africa: Revisiting the Kampala Declaration.[51]

THE CONVENTION AND RELATED CASE LAW

Although the Convention does not contain a freestanding guarantee of academic freedom, the Court has protected important aspects of it through the Convention system.

Article 10 (freedom of expression), is the principal provision through which academic freedom claims have reached the Court.[52] The cases referred to in this section concern a number of member States and are presented by legal strand rather than by respondent State; case names are given in the footnotes as registered by the Court at the date of judgment. Through Article 10, the Court has underlined the importance of academics' freedom to express opinions about the institution or system in which they work and to distribute knowledge and truth without restriction.[53] It has also treated debate on the functioning of the justice system as a matter of public interest and has recognised that academic freedom extends to controversial or unpopular views within research, professional expertise and competence.[54] The case law confirms that academic freedom may protect public communication made in an academic capacity, including media participation. Where a disciplinary measure affects such communication, the national authorities must give relevant and sufficient reasons and assess whether the interference is necessary in light of the academic freedom interest.[55] Comparable protection of expression connected to scientific and professional competence, and of academic and teaching staff against sanctions linked to their views, appears in case law concerning other member States.[56]

The Court has also protected criticism of higher education institutions under Article 10. It has required domestic courts to take sufficient account of the specific features of academic relations and to strike a fair balance between institutional reputation and individuals' academic freedom. This is especially relevant to the relationship between institutional reputation and the freedom of members of the academic community to criticise governance arrangements.[57] The case law also illustrates that academic freedom related claims can arise through appointment and renewal procedures, and that the Court has recognised the importance of procedural safeguards where academic appointments engage freedom of expression.[58]

The Court's case law also addresses access to information and research materials. It has held that access to original documentary sources for legitimate historical research was an essential element of the exercise of Article 10 rights.[59] It has also found a violation of Article 10 in relation to a general blocking order, that lacked a legal basis, and which prevented access to an online platform used by academics to access and share material connected with their academic work.[60] The case law thus shows the relevance of Article 10 to the infrastructure of research and knowledge access, even though the specific judgments were not framed as standalone academic freedom cases.

Academic freedom related harm may also occur through administrative measures that impact mobility, private life and access to higher education opportunities. For example, the Court found a violation of Article 8 (right to respect for private and family life and home) for three academics whose passports had been cancelled by administrative decision and, for two of them, a violation of Article 2 of Protocol No. 1 (right to education) because the cancellation of their passports prevented them from pursuing doctoral studies abroad.[61]

The Court's case law thus demonstrates how measures impacting academic activity may engage Convention rights. However, the case law also shows the limits of the present legal protections. Applicants must frame their claim through the Convention right that captures an aspect of academic freedom. Any interference is then assessed under the requirements of that right, including proportionality, with due regard to any applicable margin of appreciation. That approach has protected important aspects of the right to academic freedom, but it does not establish a comprehensive, freestanding Convention guarantee or impose a general duty to establish operational safeguards specific to academic freedom. Nor has the Court recognised institutional autonomy as a freestanding Convention right.

COUNCIL OF EUROPE STANDARDS

There are a range of important soft-law instruments adopted by the Council of Europe on academic freedom and university autonomy. These texts have often been leading international instruments that have supported the development of academic freedom protections both within and outside of the Council of Europe region.



Recommendation CM/Rec(2012)7 is the central Council of Europe standard on academic freedom. Its adoption in 2012, building on earlier Council of Europe work, confirms that academic freedom is an established part of the acquis and supports the institutional case for developing a binding regional standard within the Organisation. It recognises academic freedom and institutional autonomy as intrinsic values of higher education and as essential to democracy, human rights and the rule of law.[62] It also places responsibility on public authorities to establish and maintain the framework in which they can be exercised. That public-responsibility framing is important because interference often appears through ordinary regulatory systems: governance, funding, quality assurance, staffing, autonomy and accountability.

Recommendation CM/Rec(2007)6 on the public responsibility for higher education and research recognises higher education and research as public responsibilities and addresses the role of public authorities in ensuring the conditions for their

proper functioning. Read with CM/Rec(2012)7, it supports the proposition that academic freedom cannot be secured solely by protecting isolated acts of speech. It requires an institutional framework within which universities and research bodies can fulfil their public functions.[63]

The Parliamentary Assembly has repeatedly treated academic freedom and institutional autonomy as democratic concerns. Recommendation 1762(2006) addressed academic freedom and university autonomy in Europe while Resolution 2352(2020) identified the protection gap directly, linking continuing abuses to the absence of regularly monitored data and a legally binding international agreement, and stating the need for a European convention with instruments for information gathering, monitoring and assistance.[64] Recommendation 2189 (2020) then asked the Committee of Ministers to assess the need for and feasibility of a binding instrument.[65]

Recent Council of Europe work has already started to move academic freedom from this more general recognition towards standard-setting, monitoring and possible codification. *The Academic Freedom in Action* initiative, 2025 conference, Academic Freedom Insights series and the launch of the Council of Europe report on erosion of academic freedom all point to the same institutional conclusion that existing protections are fragmented and uneven, and stronger common standards and monitoring are being considered.[66]

The Venice Commission's updated Rule of Law Checklist confirms the rule-of-law dimension of academic freedom. It treats academic freedom as legally grounded in recognised rights, including education and freedom of expression, and recognises both personal and institutional dimensions, including expression inside and outside the academic community. This supports the view that academic freedom is more than a higher education policy value but part of the institutional conditions for democratic legality.[67]

Finally, while outside the Council of Europe, it is worth noting two other European regional standards. The European Higher Education Area's Rome Communiqué and its Statement on Academic Freedom adopted a common understanding of academic freedom and treat institutional autonomy as constitutive for its exercise.[68] At Tirana in 2024, ministers adopted statements on fundamental values, identifying academic freedom, academic integrity, institutional autonomy, student and staff participation, public responsibility for higher education and public responsibility of higher education as interconnected values that should be reflected in law, regulation, frameworks and practice. The EHEA process remains non-binding, but it is increasingly moving towards implementation and monitoring, which reinforces the distinction between policy convergence and enforceable human rights obligations.[69]

Within the European Union, Article 13 of the Charter of Fundamental Rights is the most direct binding regional reference to academic freedom. The case law of the Court of Justice of the European Union shows that Article 13 can have practical legal force within the scope of EU law; however, the Charter applies to EU institutions and member States only when they act within the scope of Union law, and therefore cannot resolve the broader Council of Europe treaty gap. In January 2024, the European Parliament adopted recommendations on the promotion of freedom of scientific research in the EU, and the Commission commissioned a study on freedom of scientific research whose final report was published on 13 October 2025.[70]





IMPLICATIONS FOR THE PRESENT ANALYSIS

The standards reviewed above provide a substantial legal and policy basis for any Council of Europe convention. They identify much of the relevant content of academic freedom and institutional autonomy. The existing framework also has important legal force.

The Court has protected academic freedom related claims under Article 10 and related Convention rights. UNESCO and United Nations materials define academic freedom and institutional autonomy with considerable specificity. Council of Europe standards connect academic freedom to democracy, human rights, the rule of law and public responsibility for higher education and research. At the same time, these protections remain either derived from other rights, non-binding or institutionally dispersed: The ECHR provides binding protection but only where harms can be framed through existing Convention rights. UNESCO and Council of Europe standards provide clearer language, but without treaty obligations, reporting duties or independent follow-up.

The legal gap in explicitly protecting academic freedom through a binding instrument cannot be assessed only at the level of international standards as its practical protection still depends on the domestic legal and institutional routes through which academic work is governed. Domestic law is therefore the point at which the existing acquis is either operationalised, translated into adjacent categories, or left without effective protection. This will be considered further in the next section. It is worth emphasising that the absence of an agreed binding regional definition affects domestic implementation as where academic freedom is routed through education, expression, science, employment or institutional autonomy without a dedicated standard, domestic authorities retain broad discretion over how the right is recognised, limited and enforced.

DOMESTIC IMPLEMENTATION AND PROTECTION

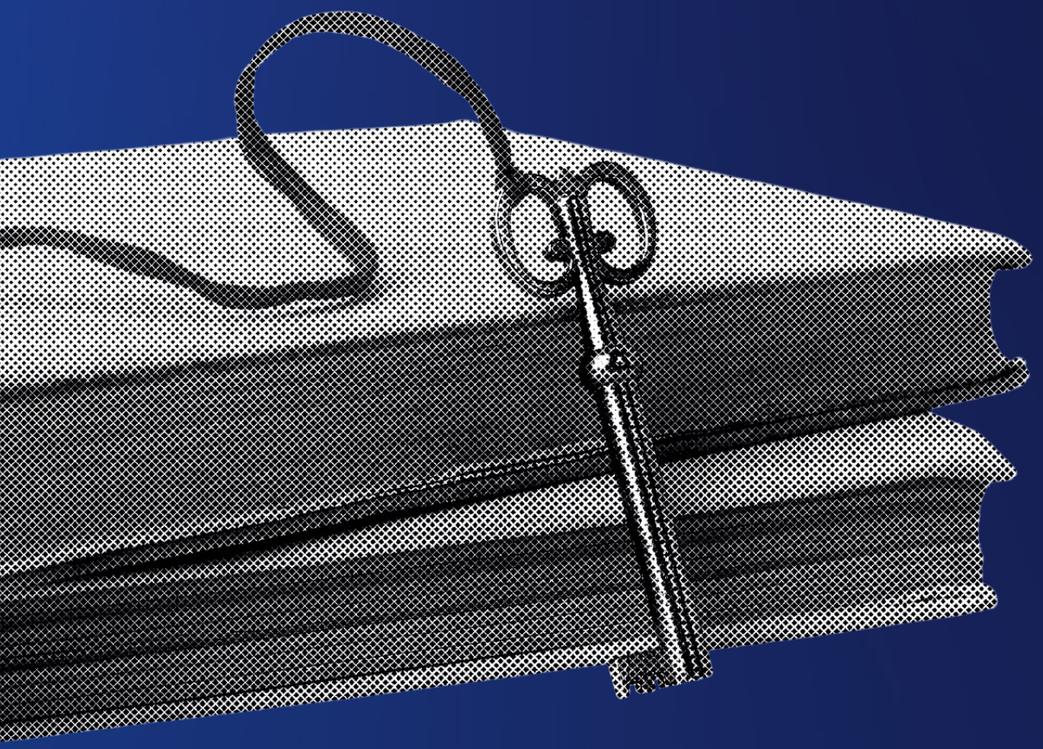



At the domestic level, protection of academic freedom is mediated through the legal categories that organise higher education and research. Domestic systems rarely leave academic freedom entirely outside law.

Protection may be found in constitutional provisions, higher education and research legislation, institutional statutes, labour and administrative-law, and areas such as equality law, quality-assurance procedures, and ombuds institutions and courts for remedies. One particular difficulty arises where those routes govern decisions affecting academic work without requiring the decision-maker to identify academic freedom and institutional autonomy as interests requiring assessment. In practice, the same academic freedom concern can enter domestic law through different procedural routes such as programme approval, security review, contract renewal, accreditation, funding, discipline or immigration control. The legal category matters because it determines who decides, what evidence is disclosed, whether reasons are given, what standard of review applies, and whether the remedy can operate before the academic activity is lost. The risk is that the academic freedom question is left to the person affected to challenge after the decision has taken effect.[71]

Because the purpose of this report is to examine and recommend standard setting, this section uses comparative legal and monitoring material to identify the domestic points at which protection needs to become operational. These are the recognition in national law, the distribution of effective power within institutions, the scope of protection across institutions and academic roles, and the availability of timely remedies. The comparative material is useful for this purpose even where it cannot show the full legal position in every member State, because it indicates how academic freedom is commonly translated into domestic legal form and where that translation may fail in practice.[72]

NATIONAL RECOGNITION AND DOMESTIC LEGAL OPERATION

Comparative constitutional data indicate that academic freedom related protection appears in different legal forms. Some constitutions refer expressly to academic freedom, others protect freedom of science, scientific research, higher education teaching, scientific creativity or university autonomy.[73]

Constitutional recognition can place academic freedom at the highest level of domestic law and guide courts, legislatures and public authorities when ordinary legislation or administrative practice affects higher education and research. However, the same data also indicates the limits of constitutional mapping as these high-level clauses can leave open important aspects such as who holds the right, which academic activities are covered, how students and precarious researchers are protected, and how individual academic freedom relates to institutional autonomy.

At the level of higher education law, the 2024 BFUG/Eurydice mapping for the European Higher Education Area suggests that many national systems refer to academic freedom in legislative frameworks, although the level of detail and the content of definitions differ.[74] This is important for the present report because domestic legislation is often where the guarantee of academic freedom becomes usable. National legislation may specify a range of academic freedom related issues such as governance arrangements, protected activities, funding rules, quality assurance, accreditation, complaints procedures and institutional duties. However, the same legislation can also change the conditions of academic work through ministerial discretion over issues that should be within the remit of university autonomy, in addition to public-funding criteria or accreditation rules. In practice, legislation is therefore both a route of protection and a potential route for restriction.

Within institutions, academic freedom is often encountered by scholars and students through internal instruments such as charters and statutes, codes of conduct, collective agreements, employment contracts, research-integrity procedures consistent with academic freedom, recognising that the protection of academic freedom supports research integrity, and student regulations. These instruments are closer to the ordinary life within universities and in practice often determine how scholars and students experience academic freedom in practice. These types of instruments often do not refer to academic freedom, and even where they do, a particular challenge is whether they carry academic freedom into the procedure that is actually deciding the matter.[75]

At the time of writing, Council of Europe and European monitoring material also suggests that weak guarantees can allow restrictions to be introduced through formally ordinary legal reforms.[76] As noted in Section 2, a law on public finance, quality assurance, research security or university governance may have a legitimate regulatory purpose but raises academic freedom concerns where it changes who controls academic work, narrows the discretion of academic bodies, or makes research and teaching dependent on political, administrative or commercial approval.

> *[A] law […] may have a legitimate regulatory purpose but raises academic freedom concerns where it changes who controls academic work, narrows the discretion of academic bodies, or makes research and teaching dependent on political, administrative or commercial approval.*

INSTITUTIONAL AUTONOMY AND EFFECTIVE CONTROL



Within domestic systems, institutional autonomy is usually expressed through powers over governance, finance, staffing and academic affairs.

As noted in Section 2, the European University Association's Autonomy Scorecard is useful in this regard because it separates organisational, financial, staffing and academic autonomy, which helps to show how an institution can have autonomy in one area while remaining dependent in another. For academic freedom, this distinction matters because control over issues such as budget approval, staff recruitment, leadership appointments, programme authorisation, premises, research priorities or internal disciplinary structures shape academic life as much as an express rule.[77]

Where such matters depend on actors outside the academic community, formal legal autonomy may have limited protective effect. Public oversight remains compatible with academic freedom where public authorities use published criteria, academic participation, reasoned decisions and access to review. Oversight becomes more difficult where broad discretion allows academic work to be redirected without an academic freedom assessment.[78]

Institutional autonomy also has an internal dimension as pressure may come from an institution's leadership, governing board, owner, or funder, the affected staff member, researcher or student may need to rely on internal procedures rather than on a direct claim against the State. Autonomy loses its protective function where it shields the legal entity of the university while leaving the academic community without participation, due process, protection against retaliation or review.[79]

This functional approach is particularly important for private, foundation, church-related, transnational and hybrid institutions, including those engaged in transnational education. Such institutions may perform recognised higher education or research functions, award recognised qualifications, receive public funds, participate in public accreditation, or operate under public regulatory authority. Domestic law may legitimately take account of institutional mission or ethos, provided minimum guarantees remain attached to recognised academic activity.[80]

SCOPE OF PROTECTION ACROSS ACADEMIC ACTIVITIES, INSTITUTIONS AND ROLES

Where domestic protection is centred on permanent academic staff, it may miss a significant part of contemporary academic work. Doctoral candidates, fixed-term researchers, adjunct staff, visiting scholars, grant-funded researchers, student researchers and students may depend on supervision, sponsorship, access to laboratories or archives, contract renewal, residence status, workload allocation, references or future appointments.

Protection limited by institutional status may also exclude persons who undertake protected academic activity independently. For those in dependent positions, the sanction may be loss of the next opportunity rather than dismissal or direct censorship. The practical effect can still be the end of a research project, the abandonment of a line of inquiry or removal from academic life.[81]



Ordinary personal or political expression on campus remains principally protected through freedom of expression, association and assembly. The narrower point is that domestic systems should be able to recognise the academic character of the harm when a person is engaged in study, research, teaching, publication, academic debate, participation in academic bodies, institutional criticism or scholarly collaboration. Protection based only on employment title or contractual security is unlikely to reach many of the persons most exposed to pressure.[82]

Student academic freedom requires particular care in this respect; campus protest, party-political activity, social-media expression and ordinary student conduct may be protected principally through freedom of expression, association, assembly, equality and education rights. Domestic law needs a way to distinguish those routes without stripping students of protection when their academic participation is affected by discipline, exclusion, police involvement, protest regulation or complaints procedures.[83]

REMEDIES, REVIEW AND TIMING

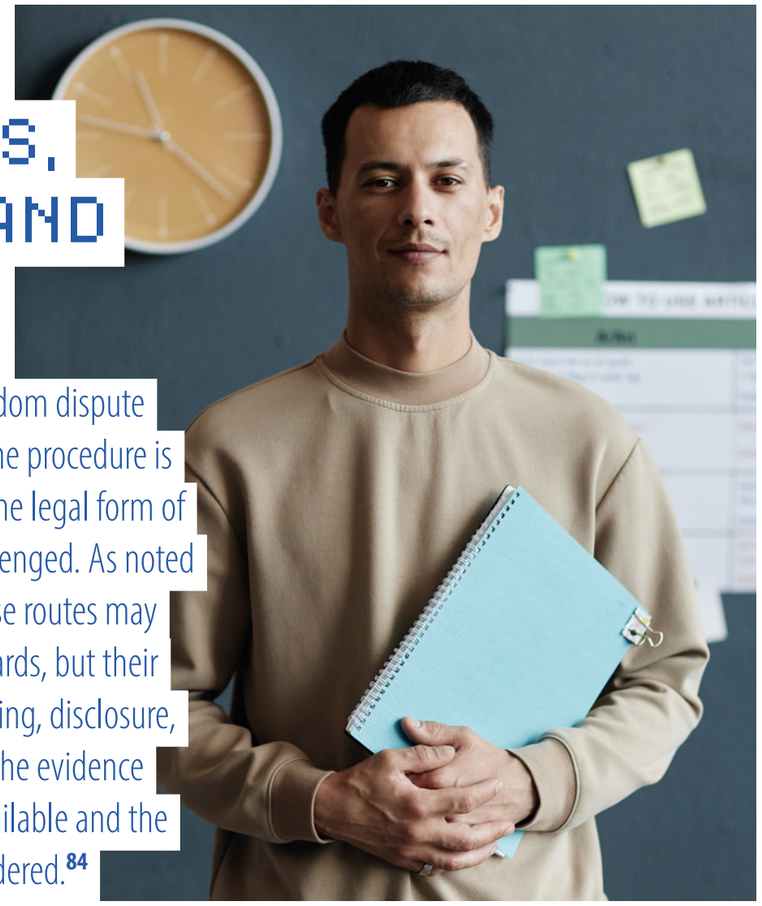

When an academic freedom dispute reaches domestic law, the procedure is usually determined by the legal form of the measure being challenged. As noted in previous sections these routes may provide genuine safeguards, but their legal focus affects standing, disclosure, the standard of review, the evidence considered, the time available and the remedies that can be ordered.[84]

Domestic systems differ most visibly in the extent to which university and higher education decisions are open to external review. Public universities and public higher education authorities may be subject to administrative, constitutional or judicial review. Where higher education and research institutions operate outside ordinary public law structures, including through transnational education, the line between public authority, institutional autonomy, contractual authority and internal management may be framed differently. A review body may ask whether a contract was lawfully ended, whether a public authority acted within its powers, whether discrimination occurred, or whether university regulations were followed. Those are important questions, but they may still leave the academic freedom issue present in the facts but marginal in the legal analysis.[85]

Funding, evaluation, accreditation and research-security decisions often receive technical review. Published criteria, competence, procedural fairness, equality, rationality and proportionality all matter, especially where the decision affects teaching, research, institutional independence or access to academic opportunity. However, the person or institution affected may be unable to test the decision where the relevant criteria are vague, the dossier is inaccessible, the security assessment gives no usable reasons, or review is limited to formal compliance. In such cases, domestic protection depends on access to the file, reasons, an independent route of review and procedures capable of assessing academic freedom effects rather than only administrative regularity.[86]

The sources examined for this section also suggest that delay has a particular effect in academic settings. A later finding of unfairness, discrimination, breach of procedure or misuse of power may have value for compensation, reinstatement or institutional correction. It may not restore a missed fieldwork season, an expired visa period, a collapsed supervision relationship, a cancelled conference, a lapsed grant, or the renewal opportunity on which an early-career researcher depended. For this reason, interim protection, accelerated

review, preservation of teaching or research access where feasible, and protection against retaliation should be treated as central safeguards. They are often the difference between a remedy that acknowledges a wrong and a remedy that preserves the academic activity at stake.[87]

Where pressure moves across public, institutional and private actors, domestic classification becomes harder. Online abuse may trigger an internal complaint that leads to suspended teaching or withdrawal from public engagement. A threatened claim may deter publication before a court considers whether proceedings are abusive. Foreign pressure may be treated as personal security, immigration, diplomacy or platform moderation rather than interference with academic life. Digital and AI-enabled systems create similar risks where technical systems determine access to teaching, assessment, protest space, publication platforms or disciplinary files. In these settings, the practical safeguard is coordination: a route for early advice, evidence-gathering, reasons, referral, review and support between the bodies that hold different parts of the problem.[88]

Monitoring remains limited where information relevant to academic freedom is recorded across separate institutional or administrative channels such as employment, security, regulation or immigration. Incident reporting is valuable, but by itself it may not show whether domestic systems have clear legal duties, competent bodies, accessible procedures, national focal points, data collection or effective follow-up. PACE identified this problem when it linked continuing abuses to the absence of regularly monitored data and a legally binding agreement. For domestic implementation, the point is that remedies for individual cases and monitoring of recurring patterns need to be connected.[89]

IMPLICATIONS FOR A COUNCIL OF EUROPE INSTRUMENT

The comparative material illustrates that member States have legal routes through which academic freedom related harms may be raised, but those routes vary in the extent to which they identify academic freedom as the relevant legal interest.

Recognition at constitutional, statutory or institutional level protects the right only where it reaches the decision that controls the academic activity. Autonomy protects the right only where it secures the conditions under which the academic community can work. Remedies protect the right only where they can operate in time and with enough information to assess the academic freedom issue.[90] A pending French proposal illustrates how definition, individual coverage, enforcement and evaluation could be combined within a single statutory framework.[91]

A Council of Europe instrument has the potential to significantly improve the domestic implementation of academic freedom. Where a measure materially affects academic freedom or the institutional autonomy necessary for it, domestic law should require the decision-maker to identify that effect, give reasons, apply lawful and proportionate justification, necessity and proportionality, and provide timely and impartial review, and protect against retaliation. This would preserve diversity in national higher education systems while requiring that the rules and procedures that govern academic work treat academic freedom as a legal issue in its own terms.[92]

Member States do not need a uniform Council of Europe model of university governance, employment protection, accreditation or research security. They need minimum human rights requirements at the points where domestic law, policy or institutional practice can alter the conditions for academic freedom. Section 5 considers whether and how those requirements can be translated into a binding regional convention and associated monitoring.[93]

FEASIBILITY AND ADDED VALUE OF A COUNCIL OF EUROPE CONVENTION





FEASIBILITY QUESTION AND ASSESSMENT CRITERIA

The sources examined in the preceding sections suggest that the feasibility question for a Council of Europe legally binding instrument is a relatively specific one.

Council of Europe action would begin from an established field that includes Convention case law, Committee of Ministers recommendations, Parliamentary Assembly texts, European Higher Education Area commitments, UNESCO standards, United Nations analysis, domestic comparison and current monitoring. Those materials already identify the principal protected activities, the institutional conditions for their exercise and the recurrent forms of interference. The question for this section is whether that material should be consolidated into a binding Council of Europe instrument capable of directing domestic implementation.[94]

For that assessment, the relevant criteria are the institutional mandate, the maturity of the existing acquis, the added legal value beyond recommendations and guidance, the compatibility with legitimate diversity in national higher education systems, and the availability of a workable monitoring and follow-up model. Applied together, those criteria point towards the strong feasibility of developing a convention. As previous sections have shown, academic freedom concerns freedom of expression, the right to education, scientific inquiry, participation in knowledge production, institutional independence, democratic security and the rule of law. These sit within the same institutional field as media freedom, judicial independence, civil society space and professional independence, and thus directly within the Council of Europe mandate.[95]

The review in this report also suggests that the identification of constraints on academic freedom has outpaced the legal protections available for it. PACE has already linked continuing abuses to the absence of regularly monitored data and a legally binding agreement, and the Committee of Ministers has noted the possibility of assessing the feasibility of a binding instrument.[96] The Council of Europe Academic Freedom in Action project has also generated conferences, policy briefs, analytical work and the 2025 report on erosion of academic freedom. Further consultation will be necessary on particular drafting questions, but those are not reasons to postpone the development of a legal instrument.[97]



AVAILABLE OPTIONS

Continued reliance on the existing framework would preserve an important body of protection, especially through Article 10 of the Convention and related rights, CM/Rec(2012)7, UNESCO standards, EHEA commitments and domestic law.

That route has practical value, particularly where courts, ombuds institutions, regulators or university bodies already apply those standards. Its limitation is visible in the domestic analysis above, where academic freedom frequently reaches law through adjacent issues. The existing framework does not consistently require those procedures to identify academic freedom when the decision materially affects academic work.[98]

A further Committee of Ministers recommendation, guidance document or toolkit could clarify domestic expectations and would have real value. Much of the substantive content can already be specified, as set out in previous sections, but such material should accompany any future convention through an explanatory report and implementation guidance. As a substitute for a convention, however, a recommendation would remain dependent on voluntary uptake and would not create binding reporting, review or domestic implementation duties.

A monitoring-only initiative could also improve visibility. Existing incident monitoring, academic freedom indices and autonomy scorecards already help to identify trends and recurring risks.[99] However, monitoring without a treaty standard would still leave the assessment of domestic law and institutional practice dependent on soft-law benchmarks. It would also leave unresolved the practical problem identified in Section 4, namely that relevant information is held across separate domestic procedures and institutions. Data collection is necessary, but it has limited effect where the domestic system itself does not treat academic freedom as the right engaged by those decisions.[100]

The remaining option is a specialised Council of Europe convention, supported by an explanatory report, implementation guidance and peer learning. The convention would not prescribe a uniform university model, recognising the diversity of domestic models. Indeed, comparable international standards exist for institutions whose domestic organisation also varies, including courts, police, prison services and national human rights institutions. A convention would preserve domestic diversity, while giving binding force to the procedural standards required. In this sense, the proposed instrument would be proportionate to the problem identified in this report as it would leave domestic law in place and require it to identify academic freedom expressly at the point of decision.[101]

ADDED VALUE OF A SPECIALISED HUMAN RIGHTS CONVENTION

The materials considered in Sections 3 and 4 already provide academic freedom with a significant legal basis in the Council of Europe system. However, they have not produced a regional treaty duty requiring states to ensure that public authorities, regulators, courts and higher education and research institutions protect academic freedom and determine, at the point of decision, whether a measure materially affects academic freedom or the institutional autonomy needed for it.

A convention would require that specific protections for academic freedom are put in place at the national level, and that where teaching, research, learning, publication, institutional criticism, academic association, self-governance or collaboration is materially affected, the decision-maker should have to identify that effect, give reasons, demonstrate that the measure is lawful, pursues a legitimate aim, and is necessary and proportionate, provide timely review and protect against retaliation.[102] A convention would also improve how recurring patterns are identified, as periodic reporting and independent expert review would provide a human rights legal framework for examining issues that are currently spread across fields including employment, security and regulation as academic freedom issues.[103]

The key point is thus to require domestic systems to recognise academic freedom in the legal form in which interference occurs. A convention should leave national higher education models diverse and preserve legitimate regulation of quality, public funding, safety, equality, research integrity and security. Its contribution would be to set the human rights requirements that attach when those systems affect the conditions for independent academic work. Without that regional standard, academic freedom will continue to depend too heavily on whether a case can be fitted afterwards into employment, education, expression, immigration, funding, accreditation or procedural fairness. This is particularly important where the relevant harm is tied to academic time and opportunity, as identified in Section 4.4. In these settings, a later remedy may recognise a wrong while failing to preserve the activity that required protection.

As emphasised earlier in this report, the wider justification is institutional as well as individual. Academic freedom protects the conditions under which knowledge is produced, tested and communicated. The wider harm concerns the evidence available to courts, parliaments, public authorities, journalists, civil society and affected communities. A Council of Europe convention would give that protection a binding human rights-based regional form.[104]

> *Academic freedom protects the conditions under which knowledge is produced, tested and communicated.*



SCOPE AND SUBSTANTIVE CONTENT OF A CONVENTION

The substantive field is sufficiently concrete for legal drafting. As seen in Section 3, existing materials already define academic freedom by reference to the freedom to acquire, develop, transmit, apply and engage with knowledge and ideas through research, teaching, learning and academic discourse.

A convention should use that formulation as a starting point and give treaty effect to academic freedom as a human right of every person. Whether an activity falls within the protection of academic freedom should depend on its relationship to the acquisition, development, scrutiny or transmission of knowledge, rather than on factors such as institutional affiliation, employment status, or formal title. This would not turn every campus dispute into an academic freedom claim, but would ensure that academic activities receive protection when they are materially affected.[105]

The convention should also protect institutional autonomy because academic freedom is commonly exercised through institutions. The relevant autonomy is academic, organisational, financial and staffing independence sufficient for higher education and research institutions to perform their academic mission within public accountability and the rule of law. It should cover higher education and research institutions, irrespective of legal form, including those engaged in transnational education,[106] where they perform recognised higher education or research functions, award recognised

qualifications, receive public funds, participate in public accreditation or operate under public regulatory authority. Institutional mission or ethos may be relevant to the domestic framework, provided lawful teaching, research, learning, academic criticism and due process remain protected.[107]

In relation to research, the convention should protect the freedom to choose topics, questions, methods and research partners, to access data, archives, materials, facilities and digital tools subject to lawful and ethical limits; to analyse and interpret findings, and to disseminate and publish results in any medium. Research integrity and ethics also warrant protection and are mutually reinforcing with academic freedom, and they should be monitored principally through objective, transparent and non-discriminatory academic processes. Academic freedom does not excuse a substantiated breach of research integrity or ethics, but neither should those standards be used to prescribe acceptable research questions or conclusions. The problem to be addressed is the use of funding conditions, authorisation controls, sponsor vetoes, confidentiality clauses, security classifications or institutional pressure to determine acceptable topics, methods, conclusions or publication outcomes.[108]

Teaching, learning and academic expression require similarly specific treatment. The convention should protect pedagogical choices, course content, materials and academic debate, subject to professional standards, research ethics and the rights of others. It should also include intramural and extramural expression where the expression is connected to teaching, research, disciplinary expertise, institutional governance, academic association or the public function of academic knowledge. As seen in Section 3, the Court has already recognised protection for institutional and system criticism, controversial or unpopular academic views, public communication connected to academic function, and access to research materials and digital platforms used for teaching and research. Those strands should be consolidated in treaty language rather than left to case-by-case translations.

Employment and governance should also be treated as conditions of freedom. A convention should require transparent and merit-based appointment procedures, participation of the academic community in line with institutional statutes, safeguards against ideological vetting or political loyalty tests, fair disciplinary processes, and protection against non-renewal or other indirect measures substantially linked to protected academic activity. Tenure or a functional

The convention should also protect institutional autonomy because academic freedom is commonly exercised through institutions.

equivalent remains one important means of protection, and the convention should also reach precarious and dependent academic positions where the decisive sanction is loss of the next opportunity. [109]

Funding, evaluation and accreditation should be addressed because they determine the material conditions of teaching and research. Public funding should be sufficient and predictable enough to sustain the public functions of higher education and research, while remaining subject to accountability and transparent oversight. Funding, evaluation, research assessment and accreditation decisions should be based on published, viewpoint-neutral, objective, transparent and non-discriminatory criteria, with reasons and access to review where appropriate. Commercial partnerships, donor agreements and sponsorship arrangements should preserve academic control over research design, analysis and publication, and should disclose conflicts of interest. These safeguards allow public priority setting, quality assurance and partnerships to continue without transferring academic judgement to political or commercial incentives. [110]

Mobility, recognition, campus safety and digital protection should also fall within the treaty field. Academic freedom has an international dimension through attendance at conferences, cross-border collaboration, fair recognition of qualifications, access to visas and residence procedures, and protection for scholars and students at risk may determine whether academic work can continue. Campus protest and speaker-event regulation should be addressed through ordinary rights-based standards of necessity, proportionality, equality and access to education, with disciplinary processes capable of distinguishing protected academic activity from unlawful harassment or exclusion. Digital provisions should address online teaching, public scholarship, targeted harassment, doxxing, unlawful surveillance, cyber-attacks, platform-mediated silencing and automated or AI-enabled monitoring, and should require appropriate institutional support for affected staff, researchers and students.[111]



OBLIGATIONS, SAFEGUARDS AND LIMITATIONS

Member States should guarantee academic freedom in law, including where appropriate through constitutional or legislation of equivalent authority and stability, and should ensure meaningful consultation where laws, regulations or policies materially affect academic freedom or institutional autonomy.

They should refrain from unjustified interference, take appropriate legislative, administrative and judicial measures to protect against foreseeable interference by institutions and third parties, and secure effective enjoyment of the right in practice.[112]

The convention should require procedural safeguards where a decision materially affects academic freedom or institutional autonomy. These should include impartial decision-makers, standing for any person whose exercise of academic freedom is affected, including academic staff, researchers and students, acting individually or through representative bodies where appropriate, timely access to the dossier and relevant evidence, reasoned decisions, effective remedies, interim relief where immediate harm is likely, and access to judicial or otherwise independent review. Contractual, jurisdictional or confidentiality clauses should not be used to circumvent these safeguards. Where the facts establish a credible prima facie link between an adverse measure and protected academic activity, the competent authority or institution should have to demonstrate that the measure pursued a legitimate aim, was necessary and proportionate, and did not constitute retaliation for that activity.[113]

A convention should also address the procedures through which intimidation and retaliation occur including non-renewal, removal from teaching, disciplinary referral, and workload changes even where no formal censorship is imposed. Legal actions that are threatened or pursued to harass or intimidate a person because of research, publication, teaching-related speech or public engagement should be treated as academic freedom concerns where they fall within the scope of protected activity. Good-faith reporting of wrongdoing in academic settings should be protected against retaliation, consistently with existing Council of Europe whistleblower standards.[114]

The limitations clause will be central to the instrument's credibility. Restrictions should be prescribed by law, pursue a legitimate aim, be necessary and proportionate in a democratic society, be non-discriminatory and be subject to adequate procedural safeguards. National security, public order, equality, harassment prevention, research ethics and the rights of others are legitimate concerns. Restrictions based on those concerns should be applied through concrete, evidence-based and reviewable assessment. Laws and policies addressing terrorism, violent extremism or national security should not be used to suppress lawful academic discussion of sensitive topics. Advocacy of violence, intentional incitement to criminal conduct or conduct that directly and foreseeably facilitates serious harm may justify restriction where Convention requirements are met. Requirements of ideological or political conformity should not be accepted as legitimate grounds for restriction.[115]

> *The convention should require procedural safeguards where a decision materially affects academic freedom or institutional autonomy.*

MONITORING, IMPLEMENTATION AND FOLLOW-UP



The monitoring architecture should reflect the way academic freedom harms are generated. For the reasons identified in Section 4.4, a purely incident-based approach would be incomplete where relevant information is held across separate institutional, regulatory and administrative channels.

A convention should therefore combine periodic state reporting, independent expert review, structured stakeholder input and political follow-up through a Committee of the Parties or equivalent body. Publication of findings and state comments would give the process transparency without converting it into adversarial litigation.[116]

State reporting should be concise enough to be usable, while requiring information that current systems often fail to connect. Reports should address areas including legal guarantees, competent redress bodies, institutional autonomy arrangements, funding and accreditation safeguards, employment and disciplinary procedures, research-security processes, and recent legal or policy changes. An independent expert body could receive structured submissions from national human rights institutions, ombuds institutions, equality bodies, civil society, universities, staff and researcher organisations, student bodies, academic freedom monitoring bodies and, where appropriate, affected departments or academic units.[117]

National focal points or equivalent bodies could provide advice, receive or refer concerns, support access to remedies, collect data, co-ordinate between ministries, human rights and higher education actors, contribute to periodic reporting and publish an annual public note. In some systems, an existing national human rights institution, equality body or ombuds institution may be best placed to perform this function. The key requirement is independence or sufficient institutional credibility, expertise in human rights beyond higher education policy, and protection from reprisals for those seeking assistance.[118]

An urgent procedure could also be considered for serious or systemic attacks on academic freedom or institutional autonomy. The need would be clearest where persons exercising academic freedom, including academics or students, face threats, detention, mass dismissal, travel bans, closure of programmes or institutions, coercive governance intervention, large-scale retaliation or severe transnational pressure. Any procedure of this kind should remain exceptional, evidence-based and designed to complement existing human rights mechanisms. Council of Europe work on journalist safety may provide a useful comparator for alerts and follow-up, although an academic freedom mechanism would need to be adapted to institutional autonomy, employment dependence, student status, research collaboration and the role of academic bodies.[119]

RELATIONSHIP WITH EXISTING INSTRUMENTS AND AVOIDANCE OF DUPLICATION



The relationship with the Convention should be stated expressly in any drafting mandate. The proposed convention should be developed as a specialised Council of Europe human rights treaty with its own domestic implementation and monitoring arrangements.

The Convention would continue to operate as the binding baseline for freedom of expression, association, education, private life, non-discrimination, due process, effective remedy and mobility.[120]

Within Council of Europe law and policy, existing recommendations and Assembly texts would remain important interpretive material. CM/Rec(2012)7 already recognises academic freedom and institutional autonomy in terms relevant to public authority responsibility, while PACE Resolution 2352 (2020) identifies the absence of regularly monitored data and a legally binding agreement as a continuing reason for inadequate response. The EHEA framework, UNESCO standards and United Nations materials provide definitions, implementation guidance and policy convergence, while remaining different in legal form and institutional function. A convention should build on those materials and include a non-regression clause making clear that it does not limit stronger protection available under the Convention, domestic constitutional law, EU law where applicable, UNESCO standards or other international obligations.[121]

Other Council of Europe treaties also support feasibility without determining the final model. The Convention for the Protection of the Profession of Lawyer (CETS No. 226) shows how a profession or democratic function can be protected through a dedicated treaty, expert review and Committee of the Parties follow-up. The Framework Convention on Artificial Intelligence shows how the Organisation can address structural risks to human rights, democracy and the rule of law through domestic measures and monitoring. Other Council of Europe conventions in different fields further illustrate how a treaty can combine substantive duties with implementation architecture.[122]

ISSUES REQUIRING FURTHER CONSIDERATION IN DRAFTING AND PROCEDURAL RECOMMENDATION

Several issues should be resolved through treaty text and an explanatory report rather than left entirely to domestic implementation. Student academic freedom requires careful drafting to ensure that student participation in academic life is not stripped of academic freedom protection.[123]

Extramural academic speech will require similar care in development. The convention and explanatory report should avoid language that confines academic freedom to the classroom, and should also avoid extending the specialised guarantee to public statements unconnected to protected academic activity. Higher education and research institutions operating outside ordinary public law structures, including through transnational education, will also require careful treatment so that institutional ethos can be respected without removing lawful teaching, research, academic criticism, student learning or due process from protection.[124]

Research security and international collaboration should be drafted with differentiated categories. Domestic systems may legitimately address a range of issues, as discussed in previous sections. The relevant safeguards are legality, published and objective criteria, non-discrimination, concrete risk assessment, reasons, access to appeal and independent oversight. Restrictions should distinguish individuals exervising academic freedom from institutions, state-linked entities, funders and specific projects. Broad exclusions based on nationality, origin, political opinion or institutional affiliation are especially difficult to reconcile with academic freedom unless a concrete and proportionate justification is established.[125]

Campus protest, institutional speech and digital systems should also be included in the drafting mandate. Protest rules, police involvement, speaker-event procedures and disciplinary panels may affect academic freedom, freedom of expression, association, equality and access to education. Institutional neutrality or institutional speech policies may protect academic freedom where they prevent imposed orthodoxy, and may undermine it where they silence academic units or institutional criticism without transparent criteria. Digital and AI-enabled systems require attention because platform moderation, surveillance tools, automated monitoring, online harassment and doxxing can alter participation in teaching, research and public scholarship.[126]

Remedies, standing and evidential safeguards will need careful legal treatment. Interim measures, suspension of sanctions, representative routes, collective complaints and burden-shifting-type provisions may be appropriate where academic freedom harms are time-sensitive or retaliation is difficult to prove. The drafting process should identify which safeguards belong in the treaty text, which should appear in the explanatory report, and which should be developed as implementation guidance. That distinction is important because the convention should be legally precise while

> *The drafting mandate should cover a convention and explanatory report […]. It should preserve legitimate public oversight, while requiring domestic systems to identify and protect academic freedom where protected academic activity or the institutional autonomy necessary for it is materially affected.*

allowing domestic systems to implement the obligations through their own constitutional, administrative, employment and institutional procedures.[127]

The review undertaken in previous sections of this report supports the next procedural step of a human rights law-led drafting process for a Council of Europe convention on academic freedom and institutional autonomy. The process should be led by human rights and public-law expertise, with close engagement to the Council's education mandate. Structured consultation should include national human rights institutions, ombuds institutions, equality bodies, civil society, higher education institutions and their representative bodies, academic staff and researcher bodies, student bodies, academic freedom monitoring organisations and experts in research security, digital systems and university governance.[128]

The drafting mandate should cover a convention and explanatory report, together with an assessment of monitoring options and implementation guidance. It should preserve legitimate public oversight, while requiring domestic systems to identify and protect academic freedom where protected academic activity or the institutional autonomy necessary for it is materially affected. Overall, the legal field is sufficiently defined, the added value of treaty form is identifiable, and Council of Europe practice provides workable models for domestic implementation, expert review and political follow-up.[129]



CONCLUSIONS

Academic freedom is under increasing strain in Europe and around the world. Existing international and Council of Europe law protects important aspects of academic freedom through several rights.

In the ECHR system, those rights entail duties of non-interference and may, in certain defined circumstances, require positive protection measures. The existing framework does not, however, provide a comprehensive Council of Europe guarantee or require assessment of relevant academic activities in individual member States through the lens of academic freedom. That gap matters both for the person whose academic freedom is affected and for society as a whole because independent knowledge is a central component of democratic and rule-of-law infrastructure.

Academic freedom is essential because it protects the public conditions under which knowledge can be produced, tested and communicated independently. When those conditions are restricted, the loss is borne by courts, legislatures, public authorities, journalists, civil society and affected communities as well as by universities. For the Council of Europe, academic freedom therefore should be protected alongside judicial independence, media freedom, civil society space and professional independence because each preserves institutions capable of scrutiny and limits the concentration of power.

A Council of Europe convention on academic freedom would give legal form to the important function it has in European societies, and provide important protections for every person exercising academic freedom, including scholars and their academic communities, across the member States. Such a convention should recognise academic freedom as an express human right of every person and protect institutional autonomy because it enables that right to be exercised within higher education and research institutions. It should cover protected academic activity, and higher education and research institutions where they perform recognised higher education or research functions. While preserving the legitimate regulation of quality assurance, public funding, equality, safety, research integrity, national security and the rights of others, it would require restrictions that materially affect academic freedom to be lawful, necessary, proportionate, non-discriminatory and open to review. Those requirements would preserve domestic diversity while making academic freedom legally visible where it is most often placed at risk.

The feasibility assessment for the elaboration of a convention is positive. The Council of Europe has the mandate, legal acquis, institutional experience and evidentiary record necessary to proceed. Existing standards have identified the protected activities, rights holders, institutional conditions, limitation principles, safeguards, remedies and monitoring needs with sufficient clarity for drafting to begin.

Delay in the development of an instrument would leave a recognised human rights, democracy and rule of law concern dependent on indirect and uneven protection at a time when the pressure on academic life is documented and increasing. The next step should therefore be a legal drafting process, grounded in human rights law and supported by rule of law, public law and higher education expertise, with structured consultation involving human rights bodies, civil society and academic communities. The process should be directed towards a precise and operational Council of Europe convention and explanatory report capable of implementation across diverse national systems.

The case for Council of Europe action is clear. Academic freedom has been recognised in principle for decades, but recognition without operational duties leaves the right dependent on fragmented, indirect and often delayed protection. A Council of Europe convention would establish the minimum regional human rights framework needed to ensure that academic freedom is identified and protected, and that restrictions affecting it are justified and reviewed before the conditions for independent knowledge have already been lost.

NOTES

INTRODUCTION

1 PACE Resolution 2352 (2020), para. 5; Council of Europe Education Department, *The Erosion of Academic Freedom in Europe* (2025); Scholars at Risk, Free to Think 2025; Katrin Kinzelbach, Staffan I. Lindberg, Lars Lott and Angelo Vito Panaro, Academic Freedom Index - 2026 Update(Friedrich-Alexander-Universität Erlangen-Nürnberg and V-Dem Institute, 2026), [hereinafter, Kinzelbach et al., Academic Freedom Index – 2026 Update]; Maassen et al., Academic Freedom Monitor 2025. **p. 9**

ACADEMIC FREEDOM, DEMOCRACY AND THE RULE OF LAW

2 See, for example, Council of Europe Committee of Ministers, Recommendation CM/Rec(2012)7 on the responsibility of public authorities for academic freedom and institutional autonomy; Council of Europe, Academic Freedom: A Human Rights Perspective, Academic Freedom Insights series, particularly authorities cited therein; Venice Commission, Updated Rule of Law Checklist, CDL-AD(2025)002. **p. 12**

3 PACE Resolution 2352 (2020), paras 1-6; PACE Recommendation 2189 (2020); CM/Rec(2012)7; Council of Europe, The New Democratic Pact for Europe in times of rupture (2026); Kratou and Laakso, The Impact of Academic Freedom on Democracy in Africa, The Journal of Development Studies, 58(4) (2022). **p. 12**

4 Recommendation Rec(2004)4 on the European Convention on Human Rights in university education and professional training; Recommendation CM/Rec(2019)5 on the system of the ECHR in university education and professional training. **p. 12**

CURRENT CHALLENGES TO ACADEMIC FREEDOM IN EUROPE AND BEYOND

5 Council of Europe Education Department, *The Erosion of Academic Freedom in Europe* (2025), chapters 1-2 and proposals for action. **p. 15**

6 Kinzelbach et al., Academic Freedom Index - 2026 Update, pp. 11-14, Executive Summary, p. 1. **p. 15**

7 Scholars at Risk, Free to Think 2025 (2025), Appendix 2 and methodology note. **p. 15**

8 Maassen et al., Academic Freedom Monitor 2025, PE 774.721 (February 2026), abstract and executive summary; European Commission, Directorate-General for Research and Innovation, A comprehensive legal, policy, and comparative analysis for promoting and protecting the freedom of scientific research in Europe (Publications Office of the European Union 2025), doi:10.2777/4268123. **p. 15**

POLITICAL AND ADMINISTRATIVE CONTROL

9 Council of Europe, Academic Freedom Insights No. 1, Political Interference in Academic Freedom (April 2025) <https://rm.coe.int/policy-brief-17-3/4880283eb6>; Council of Europe Education Department, *The Erosion of Academic Freedom in Europe* (2025), chapter 4. **p. 16**

10 Council of Europe, Academic Freedom Insights No. 1, Political Interference in Academic Freedom, (April 2025). **p. 16**

11 European University Association, University Autonomy in Europe IV: The Scorecard 2023 (2023); Committee of Ministers, Recommendation CM/Rec(2012)7 on the responsibility of public authorities for academic freedom and institutional autonomy, adopted 20 June 2012, Appendix; UNESCO, Recommendation concerning the Status of Higher-Education Teaching Personnel, adopted 11 November 1997, paras 17-21 and 27. **p. 16**

12 Council of Europe Education Department, *The Erosion of Academic Freedom in Europe* (2025). **p. 16**

EMPLOYMENT, DISCIPLINE AND LEGAL HARASSMENT

13 UNESCO, Recommendation concerning the Status of Higher-Education Teaching Personnel (1997), paras 43-49, 56 and 72-74; Maassen et al., Academic Freedom Monitor 2025 (February 2026), sections on working conditions and institutional preconditions for academic freedom; Council of Europe Education Department, *The Erosion of Academic Freedom in Europe* (2025), chapters 2 and 5. **p. 17**

14 Council of Europe Education Department, *The Erosion of Academic Freedom in Europe* (2025), chapters 5-6; UNESCO, Recommendation concerning the Status of Higher-Education Teaching Personnel (1997), paras 46, 49 and 56; see also the implementation approach reflected in Special Rapporteur on the right to education, Academic Freedom, UN Doc. A/HRC/56/58, 25 April 2024, and Principles for Implementing the Right to Academic Freedom, UN Doc. A/HRC/56/CRP.2, 31 May 2024. **p. 17**

15 Committee of Ministers, Recommendation CM/Rec(2024)2 on countering the use of strategic lawsuits against public participation (SLAPPs), adopted 5 April 2024, Appendix, para. 1; Council of Europe, Academic Freedom Insights, SLAPPs and other Legal Threats Against Academics (2025); Directive (EU) 2024/1069 of the European Parliament and of the Council of 11 April 2024 on protecting persons who engage in public participation from manifestly unfounded claims or abusive court proceedings. **p. 17**

16 Council of Europe, Academic Freedom Insights, SLAPPs and other Legal Threats Against Academics (2025), <https://rm.coe.int/policy-brief-08/1680b6942c>. **p. 17**

FUNDING, EVALUATION, ACCREDITATION AND COMMERCIALISATION

17 Council of Europe Education Department, *The Erosion of Academic Freedom in Europe* (2025), chapters 5-6; UNESCO, Recommendation concerning the Status of Higher-Education Teaching Personnel (1997), paras 46, 49 and 56; see also the implementation approach reflected in Special Rapporteur on the right to education, Academic Freedom, UN Doc. A/HRC/56/58, 25 April 2024, and Principles for Implementing the Right to Academic Freedom, UN Doc. A/HRC/56/CRP.2, 31 May 2024. **p. 18**

18 PACE Resolution 2352 (2020), Threats to academic freedom and autonomy of higher education institutions in Europe, adopted 20 November 2020, paras 1, 6, 9.3 and 11. **p. 18**

NOTES

19 Council of Europe Education Department, *The Erosion of Academic Freedom in Europe* (2025), chapter 7; Maassen et al., Academic Freedom Monitor 2025, PE 774.721 (February 2026), section 4.4 and conclusion; UNESCO, Recommendation concerning the Status of Higher-Education Teaching Personnel (1997), paras 12, 27, 29, 33 and 45-47. **p. 18**

20 Council of Europe Education Department, *The Erosion of Academic Freedom in Europe* (2025) chapter 7; Peter Maassen et al., Academic Freedom Monitor 2025, PE 774.721 (February 2026), section 4.4. **p. 18**

21 UNESCO, Recommendation concerning the Status of Higher-Education Teaching Personnel (1997), paras 24, 27, 29 and 36; Standards and Guidelines for Quality Assurance in the European Higher Education Area (ESG) (2015), standards 2.2-2.7 and 3.3; Committee of Ministers, Recommendation CM/Rec(2012)7 on the responsibility of public authorities for academic freedom and institutional autonomy, adopted 20 June 2012, Appendix. **p. 18**

RESEARCH SECURITY, DIGITAL PRESSURE AND TRANSNATIONAL REPRESSION

22 Council Recommendation of 23 May 2024 on enhancing research security, ST/9097/2024/INIT, OJ C, C/2024/3510, 30 May 2024, recitals and recommendations, including the principle that international research co-operation should be 'as open as possible, as closed as necessary'; Council of Europe Education Department, *The Erosion of Academic Freedom in Europe* (2025), chapter 8; Council of Europe, Academic Freedom Insights, Foreign Interference in Academia and its impact on academic freedom and institutional autonomy (2025), <https://rm.coe.int/policy-brief-22/4880296e38>. **p. 19**

23 UNESCO, Recommendation concerning the Status of Higher-Education Teaching Personnel (1997), para. 27; Council Recommendation of 23 May 2024 on enhancing research security, ST/9097/2024/INIT, OJ C, C/2024/3510, 30 May 2024; Maassen et al., Academic Freedom Monitor 2025 (February 2026), thematic sections on foreign interference and international developments; ECHR, art. 14; Protocol No. 4 to the ECHR, art. 2; Charter of Fundamental Rights of the European Union, art. 21, where EU law applies; PACE Resolution 2509 (2023), Transnational repression as a growing threat to the rule of law and human rights; Council of Europe Education Department, *The Erosion of Academic Freedom in Europe* (2025). **p. 19**

24 Council of Europe Education Department, *The Erosion of Academic Freedom in Europe* (2025), chapter 6; Council of Europe, Academic Freedom Insights, Online Harassment (2025); Council of Europe Framework Convention on Artificial Intelligence and Human Rights, Democracy and the Rule of Law, opened for signature 5 September 2024, arts 1, 5, 7 and 15. **p. 19**

25 Council of Europe Education Department, *The Erosion of Academic Freedom in Europe* (2025), chapter 6; Maassen et al., Academic Freedom Monitor 2025, PE 774.721 (February 2026), sections 3.5.3 and 5. **p. 19**

26 Parliamentary Assembly of the Council of Europe, Resolution 2509 (2023), Transnational repression as a growing threat to the rule of law and human rights, adopted 23 June 2023, paras 1, 8-14 and 17; Council of Europe, Academic Freedom Insights, Transnational Repression and Threats Against Scholars (2025). **p. 19**

CAMPUS PROTEST, INSTITUTIONAL SPEECH AND EQUALITY DUTIES

27 Scholars at Risk, Free to Think 2025 (2025), sections on student expression and assembly; Council of Europe Education Department, *The Erosion of Academic Freedom in Europe* (2025), chapter 6 and proposals for action. **p. 20**

28 UNESCO, Recommendation concerning the Status of Higher-Education Teaching Personnel (1997), paras 22(f)–(h), 22(o)–(p) and 63; Council of Europe Education Department, *The Erosion of Academic Freedom in Europe* (2025), chapters 5-6. **p. 20**

29 Scholars at Risk, Free to Think 2025: Report of the Scholars at Risk Academic Freedom Monitoring Project (2025), <https://www.scholarsatrisk.org/resources/free-to-think-2025/>. **p. 20**

STUDENT ACADEMIC FREEDOM

30 Committee on Economic, Social and Cultural Rights, General Comment No. 13: The right to education, UN Doc. E/C.12/1999/10, 8 December 1999, paras 38-40 and 59; European Higher Education Area, Rome Ministerial Communiqué, 19 November 2020, Annex I, Statement on Academic Freedom; Special Rapporteur on the right to education, Academic Freedom, UN Doc. A/HRC/56/58, 25 April 2024, paras 9-16; Committee of Ministers, Recommendation CM/Rec(2012)7 on the responsibility of public authorities for academic freedom and institutional autonomy, Appendix, para. 8; UNESCO, Beyond Limits: New Ways to Reinvent Higher Education (2022), p. 27. **p. 21**

31 Scholars at Risk, Free to Think 2025: Report of the Scholars at Risk Academic Freedom Monitoring Project (2025), sections on student expression and assembly and methodology note; ECHR, arts 10 and 11; Protocol No. 1 to the ECHR, art. 2; Council of Europe Education Department, *The Erosion of Academic Freedom in Europe* (2025), chapter 6 and proposals for action. **p. 21**

32 Council of Europe, Academic Freedom Insights, Online Harassment (2025); PACE Resolution 2509 (2023), Transnational repression as a growing threat to the rule of law and human rights, adopted 23 June 2023, paras 1, 8-14 and 17. **p. 21**

33 UNESCO, Recommendation concerning the Status of Higher-Education Teaching Personnel, adopted 11 November 1997, paras 27, 43-49, 56 and 72-74; Working Group on Academic Freedom, Principles for Implementing the Right to Academic Freedom, UN Doc. A/HRC/56/CRP.2, 31 May 2024; ECHR, arts 8, 10, 11, 13 and 14; Protocol No. 1 to the ECHR, art. 2; Council of Europe Education Department, *The Erosion of Academic Freedom in Europe* (2025), chapters 5–6; Maassen et al., Academic Freedom Monitor 2025, sections on working conditions and institutional preconditions for academic freedom. **p. 21**

IMPLICATIONS FOR THE PRESENT REPORT

34 Council of Europe Education Department, *The Erosion of Academic Freedom in Europe* (2025), chapters 4-8 and proposals for action; Council of Europe, Academic Freedom Insights, Self-Censorship in Academia: Causes and Consequences (2025); Council of Europe, Academic Freedom Insights, Academic Freedom: A Human Rights Perspective (2025). **p. 21**

NOTES

35 Scholars at Risk, Free to Think 2025 (2025), methodology note; Council of Europe Education Department, *The Erosion of Academic Freedom in Europe* (2025), proposals for action. **p. 21**

36 UNESCO, Recommendation concerning the Status of Higher-Education Teaching Personnel (1997), paras 27, 43-49, 56 and 72-74; Special Rapporteur on the right to education, Academic Freedom, A/HRC/56/58, 25 April 2024, paras 9-17 and 49-60; A/HRC/56/CRP.2, 31 May 2024. **p. 21**

ACADEMIC FREEDOM IN THE HUMAN RIGHTS FRAMEWORK

37 Convention for the Protection of Human Rights and Fundamental Freedoms (European Convention on Human Rights, ECHR), opened for signature 4 November 1950, ETS No. 5, arts 6, 8, 10, 11, 13 and 14; Protocol No. 1 to the ECHR, art. 2; Protocol No. 4 to the ECHR, art. 2; International Covenant on Civil and Political Rights (ICCPR), adopted 16 December 1966, entered into force 23 March 1976, art. 19; International Covenant on Economic, Social and Cultural Rights (ICESCR), adopted 16 December 1966, entered into force 3 January 1976, arts 13 and 15. **p. 22**

INTERNATIONAL HUMAN RIGHTS AND UNESCO STANDARDS

38 ICCPR, art. 19(1)-(2). See also Human Rights Committee, General Comment No. 34: Article 19, Freedoms of opinion and expression, UN Doc. CCPR/C/GC/34, 12 September 2011, paras 2-3, 11 and 13. **p. 23**

39 Human Rights Committee, General Comment No. 34, paras 2-3, 11-13 and 20. The Committee emphasises that freedom of opinion and expression are indispensable conditions for the full development of the person and essential for society. **p. 23**

40 ICESCR, arts 13, 15(1)(a), 15(1)(b) and 15(3). Article 15(3) requires States parties to respect the freedom indispensable for scientific research and creative activity. **p. 23**

41 Committee on Economic, Social and Cultural Rights, General Comment No. 13: The right to education, UN Doc. E/C.12/1999/10, 8 December 1999, paras 38-40 and 59. **p. 24**

42 Committee on Economic, Social and Cultural Rights, General Comment No. 25 (2020) on science and economic, social and cultural rights, UN Doc. E/C.12/GC/25, 30 April 2020; ICESCR, art. 15(3). **p. 24**

43 UNESCO, Recommendation concerning the Status of Higher-Education Teaching Personnel, adopted by the General Conference at its 29th session, 11 November 1997, para. 27. **p. 24**

44 UNESCO, Recommendation concerning the Status of Higher-Education Teaching Personnel, paras 17-21 and 27. Paragraph 18 treats institutional autonomy as the institutional form of academic freedom, and paragraph 19 calls on public authorities to protect higher education institutions from threats to their autonomy from any source. **p. 24**

45 UNESCO, Recommendation on Science and Scientific Researchers, adopted by the General Conference at its 39th session, 13 November 2017. See in particular the provisions and accompanying UNESCO materials on scientific freedom, responsibility and the safety of scientific researchers. **p. 24**

46 UNESCO, 'UNESCO revises landmark 1966 and 1997 Recommendations on the Status of Teaching Personnel' (5 June 2026); UNESCO, Santiago Consensus (adopted 29 August 2025). **p. 24**

47 Special Rapporteur on the right to education, Academic Freedom, UN Doc. A/HRC/56/58, 25 April 2024, especially paras 6, 9, 23 and 84(a); Working Group on Academic Freedom, Principles for Implementing the Right to Academic Freedom, UN Doc. A/HRC/56/CRP.2, 31 May 2024. The report proposes considering academic freedom as an autonomous human right grounded in existing international law; it is a Special Rapporteur report and is not itself a binding treaty instrument. **p. 24**

48 Working Group on Academic Freedom, Principles for Implementing the Right to Academic Freedom, circulated as UN Doc. A/HRC/56/CRP.2, 31 May 2024. **p. 25**

49 Inter-American Commission on Human Rights, Declaration of Inter-American Principles on Academic Freedom and University Autonomy, adopted 9 December 2021, Principles I-II. **p. 25**

50 IACHR, Press Release No. 331/21, IACHR Issues Declaration of Inter-American Principles on Academic Freedom and University Autonomy, 9 December 2021; IACHR, Declaration of Inter-American Principles on Academic Freedom and University Autonomy, Principles I-II. **p. 25**

51 See, Scholars at Risk, Regional Coalitions for Academic Freedom: Africa Coalition for Academic Freedom, describing its 2025 research initiatives on the historical roots and current status of academic freedom in Africa and the development of African principles on academic freedom; CODESRIA, Academic Freedom Conference 2025: Revisiting the Kampala Declaration, Dar es Salaam, 29 April-2 May 2025; The Kampala Declaration on Intellectual Freedom and Social Responsibility (1990), reproduced in UN Doc. E/CN.4/2004/WG.21/5. **p. 25**

THE CONVENTION AND RELATED CASE LAW

52 Cases have arisen under ECHR, arts 8, 10, 11, 13 and 14; Protocol No. 1 to the ECHR, art. 2, and Protocol No. 4 to the ECHR, art. 2. **p. 26**

53 Sorguç v. Turkey, no. 17089/03, judgment of 23 June 2009, especially para. 35. **p. 26**

54 Mustafa Erdoğan and Others v. Turkey, nos 346/04 and 39779/04, judgment of 27 May 2014, especially paras 40-41. **p. 26**

55 Kula v. Turkey, no. 20233/06, judgment of 19 June 2018. **p. 26**

56 Hertel v. Switzerland, no. 25181/94, judgment of 25 August 1998; Vogt v. Germany, no. 17851/91, judgment of 26 September 1995; Ayuso Torres v. Spain, no. 74729/17, judgment of 8 November 2022. [Drafting note: comparator cases proposed to widen the range of respondent States cited; relevance and citations to be verified before finalisation.] **p. 26**

57 Kharlamov v. Russia, no. 27447/07, judgment of 8 October 2015 (judgment predating the cessation of the respondent State's membership of the Council of Europe). **p. 26**

58 Lombardi Vallauri v. Italy, no. 39128/05, judgment of 20 October 2009. **p. 26**

NOTES

59 Kenedi v. Hungary, no. 31475/05, judgment of 26 May 2009, para 43. **p. 26**

60 Cengiz and Others v. Turkey, nos 48226/10 and 14027/11, judgment of 1 December 2015. **p. 26**

61 Telek and Others v. Türkiye, nos 66763/17, 66767/17 and 15891/18, judgment of 21 March 2023. See also ECtHR Press Release ECHR 086 (2023), 21 March 2023, summarising the Article 8 and Article 2 of Protocol No. 1 violations and ECHR, Guide on Article 2 of Protocol No. 1 to the ECHR, para 48 < https://ks.echr.coe.int/documents/d/echr-ks/guide_art_2_protocol_1_eng>. **p. 26**

COUNCIL OF EUROPE STANDARDS

62 Committee of Ministers, Recommendation CM/Rec(2012)7 on the responsibility of public authorities for academic freedom and institutional autonomy, adopted 20 June 2012, preamble and Appendix. **p. 27**

63 Committee of Ministers, Recommendation CM/Rec(2007)6 on the public responsibility for higher education and research, adopted 16 May 2007. **p. 28**

64 PACE Recommendation 1762 (2006), Academic freedom and university autonomy, adopted 30 June 2006; PACE Resolution 2352 (2020), paras 1-6, especially para. 5. **p. 28**

65 PACE Recommendation 2189 (2020), Threats to academic freedom and autonomy of higher education institutions in Europe, adopted 20 November 2020, para. 5.2.4; Committee of Ministers, Reply to Recommendation 2189 (2020), Doc. 15312, adopted at the 1405th meeting of the Ministers' Deputies, 3 June 2021, paras 7-8. **p. 28**

66 Council of Europe Education Department, Academic Freedom in Action project materials, including the Academic Freedom Insights series and 2025 conference materials, <https://www.coe.int/en/web/education/academic-freedom-in-action>; Council of Europe Education Department, *The Erosion of Academic Freedom in Europe* (2025). **p. 28**

67 European Commission for Democracy through Law (Venice Commission), Updated Rule of Law Checklist, CDL-AD(2025)002. **p. 28**

68 European Higher Education Area, Rome Ministerial Communiqué, 19 November 2020, and Annex I, Statement on Academic Freedom. The Statement adopts a common understanding of academic freedom and treats institutional autonomy as constitutive for academic freedom. **p. 28**

69 European Higher Education Area, Statements on Fundamental Values, Annex I to the Tirana Ministerial Communiqué, 30 May 2024, <https://www.eqar.eu/assets/uploads/2024/06/ANNEX-1-EHEA-STATEMENTS-ON-FUNDAMENTAL-VALUES.pdf >. **p. 28**

70 Charter of Fundamental Rights of the European Union, arts 13 and 51; Case C-66/18, European Commission v. Hungary, EU:C:2020:792, judgment of 6 October 2020; European Parliament resolution of 17 January 2024 with recommendations to the Commission on promotion of the freedom of scientific research in the EU (2023/2184(INL)), P9_TA(2024)0022; European Commission, Directorate-General for Research and Innovation, A comprehensive legal, policy, and comparative analysis for promoting and protecting the freedom of scientific research in Europe (Publications Office of the European Union 2025), doi:10.2777/4268123. **p. 28**



ACADEMIC FREEDOM IN THE HUMAN RIGHTS FRAMEWORK

71 Committee of Ministers, Recommendation CM/Rec(2012)7 on the responsibility of public authorities for academic freedom and institutional autonomy, adopted 20 June 2012, Appendix; UNESCO, Recommendation concerning the Status of Higher-Education Teaching Personnel, adopted 11 November 1997, paras 17-21, 27 and 43-49; Peter Maassen, Vasiliki Kosta, Paola Mattei, Olga Ceran, Dennis Martinsen and Lazar Živanić, Academic Freedom Monitor 2025: Analysis of academic freedom trends in the EU, European Parliamentary Research Service/STOA, PE 774.721 (February 2026), executive summary and Part I; Council of Europe Education Department, *The Erosion of Academic Freedom in Europe* (2025), pp. 4-8. **p. 31**

72 See Janika Spannagel, 'Introducing Academic Freedom in Constitutions: a new global dataset, 1789-2022', European Political Science 23 (2024), pp. 421-432; Janika Spannagel, 'Academic Freedom in Constitutions (AFC) Dataset (1789-2022)', Harvard Dataverse, DOI: 10.7910/DVN/E8MIMF; Klaus D. Beiter, Terence Karran and Kwadwo Appiagyei-Atua, 'Academic freedom and its protection in the law of European states: Measuring an international human right', European Journal of Comparative Law and Governance 3(3) (2016), pp. 254-345; European University Association, University Autonomy in Europe IV: The Scorecard 2023 (2023). **p. 31**

NATIONAL RECOGNITION AND DOMESTIC LEGAL OPERATION

73 Spannagel, 'Introducing Academic Freedom in Constitutions', 421-432; Spannagel, Academic Freedom in Constitutions (AFC) Dataset. The dataset distinguishes provisions referring to academic freedom, related individual freedoms such as freedom of science or research, and institutional autonomy. **p. 32**

74 European Higher Education Area, The European Higher Education Area in 2024: Bologna Process Implementation Report, Chapter 3: Fundamental Values (2024); European Higher Education Area, Statements on Fundamental Values, adopted at the Tirana Ministerial Conference (2024), sections on academic freedom and institutional autonomy; UNESCO 1997 Recommendation, paras 27, 43-49 and 56; CM/Rec(2012)7, Appendix. **p. 32**

75 UNESCO 1997 Recommendation, paras 27 and 45-56; Committee of Ministers, Recommendation CM/Rec(2007)6 on the public responsibility for higher education and research, adopted 16 May 2007; CM/Rec(2012)7, Appendix; Working Group on Academic Freedom, Principles for Implementing the Right to Academic Freedom, UN Doc. A/HRC/56/CRP.2, 31 May 2024, Principle 2 and Appendix II, points 1, 2, and 4. **p. 32**

76 Council of Europe Education Department, *The Erosion of Academic Freedom in Europe* (2025), chapters 4, 7 and 8; Maassen et al., Academic Freedom Monitor 2025, thematic analysis on institutional autonomy, commercialisation and research security; PACE Resolution 2352 (2020), Threats to academic freedom and autonomy of higher education institutions in Europe, adopted 20 November 2020, paras 1, 6, 9.3 and 11. **p. 32**

INSTITUTIONAL AUTONOMY AND EFFECTIVE CONTROL

77 European University Association, University Autonomy in Europe IV: The Scorecard 2023 (2023); CM/Rec(2012)7, Appendix, paras 3-7; UNESCO 1997 Recommendation, paras 17-21 and 27; European Higher Education Area, Statements on Fundamental Values (2024), section on institutional autonomy. **p. 33**

78 Committee of Ministers, Recommendation CM/Rec(2007)6, Appendix, especially paras 4 and 9-11; CM/Rec(2012)7, Appendix, paras 3-7 and 21-22; Standards and Guidelines for Quality Assurance in the European Higher Education Area (ESG) (2015), standards 2.2-2.7 and 3.3; UNESCO 1997 Recommendation, paras 17-21, 24 and 27. **p. 33**

79 UNESCO 1997 Recommendation, paras 27 and 43-56; CESCR, General Comment No. 13: The right to education, UN Doc. E/C.12/1999/10, 8 December 1999, paras 38-40 and 59; CM/Rec(2012)7, Appendix, paras 4-7; Working Group on Academic Freedom, Principles for Implementing the Right to Academic Freedom, UN Doc. A/HRC/56/CRP.2, 31 May 2024. **p. 33**

80 UNESCO 1997 Recommendation, para. 1(e) and paras 17-21 and 27; Special Rapporteur on the right to education, Academic Freedom, UN Doc. A/HRC/56/58, 25 April 2024, paras 10-16; CM/Rec(2012)7, Appendix. **p. 33**

SCOPE OF PROTECTION ACROSS ACADEMIC ACTIVITIES, INSTITUTIONS AND ROLES

81 UNESCO 1997 Recommendation, paras 43-49, 56 and 72-74; Maassen et al., Academic Freedom Monitor 2025, sections on working conditions and institutional preconditions for academic freedom; Council of Europe Education Department, *The Erosion of Academic Freedom in Europe* (2025), chapters 5-6; Special Rapporteur on the right to education, A/HRC/56/58, paras 46-60. **p. 34**

82 CESCR, General Comment No. 13, paras 38-40; UNESCO 1997 Recommendation, para. 27; Special Rapporteur on the right to education, A/HRC/56/58, paras 9-12; Working Group on Academic Freedom, Principles for Implementing the Right to Academic Freedom, UN Doc. A/HRC/56/CRP.2. **p. 34**

83 Special Rapporteur on the right to education, A/HRC/56/58, paras 9-16; CESCR, General Comment No. 13, paras 38-40; ECHR, arts 10, 11 and 14; Protocol No. 1 to the ECHR, art. 2; Council of Europe Education Department, *The Erosion of Academic Freedom in Europe* (2025), chapters 5-6. **p. 34**

REMEDIES, REVIEW AND TIMING

84 ECHR, arts 6 and 13 where applicable; Protocol No. 1 to the ECHR, art. 2; Protocol No. 4 to the ECHR, art. 2; UNESCO 1997 Recommendation, paras 48-56; CM/Rec(2012)7, Appendix; PACE Resolution 2352 (2020), para. 5. **p. 35**

85 Working Group on Academic Freedom, Principles for Implementing the Right to Academic Freedom, UN Doc. A/HRC/56/CRP.2, Principle 2 and Appendix II, points 1, 2 and 4; UNESCO 1997 Recommendation, paras 46, 49 and 56; CM/Rec(2012)7, Appendix. **p. 35**

86 Standards and Guidelines for Quality Assurance in the European Higher Education Area (ESG) (2015), standards on published criteria, reporting, complaints and appeals; Council Recommendation of 23 May 2024 on enhancing research security, ST/9097/2024/INIT, OJ C, C/2024/3510, 30 May 2024; Council of Europe Education Department, *The Erosion of Academic Freedom in Europe* (2025), chapters 7-8. p. 35

87 UNESCO 1997 Recommendation, paras 46, 49 and 56; Working Group on Academic Freedom, Principles for Implementing the Right to Academic Freedom, UN Doc. A/HRC/56/CRP.2, Principle 2 and Appendix II, points 1, 2 and 4; ECHR, arts 6 and 13 where applicable. p. 36

88 Committee of Ministers, Recommendation CM/Rec(2024)2 on countering the use of strategic lawsuits against public participation (SLAPPs), adopted 5 April 2024, Appendix, para. 1; Council of Europe Framework Convention on Artificial Intelligence and Human Rights, Democracy and the Rule of Law, CETS No. 225, opened for signature 5 September 2024, arts 1, 5, 7 and 15; PACE Resolution 2509 (2023), Transnational repression as a growing threat to the rule of law and human rights, paras 1 and 8-14; Council of Europe Education Department, *The Erosion of Academic Freedom in Europe* (2025), chapter 6. p. 36

89 PACE Resolution 2352 (2020), para. 5; Council of Europe Education Department, *The Erosion of Academic Freedom in Europe* (2025), proposals for action on legal safeguards, support mechanisms, data, monitoring and assistance; Scholars at Risk, Free to Think 2025: Report of the Scholars at Risk Academic Freedom Monitoring Project (2025), methodology note. p. 36

IMPLICATIONS FOR A COUNCIL OF EUROPE INSTRUMENT

90 CM/Rec(2012)7, Appendix; UNESCO 1997 Recommendation, paras 17-21, 27 and 46-56; Special Rapporteur on the right to education, A/HRC/56/58, paras 49-60; Working Group on Academic Freedom, Principles for Implementing the Right to Academic Freedom, UN Doc. A/HRC/56/CRP.2. p. 36

91 Sénat, Proposition de loi no 543 rect. (2024–2025), deposited 18 April 2025, arts 2–3; Sénat, Texte adopté no 57 (2025–2026), 11 February 2026, arts 1, 3 II and 7; Assemblée nationale, Proposition de loi no 2476, deposited 12 February 2026. The Senate text would define academic freedom, expressly apply that statutory definition to researchers under the Research Code, create a criminal offence of obstructing academic freedom in a concerted manner and by means of threats, and require Hcéres to promote academic freedom and ensure that it is taken into account in the evaluations it conducts or whose procedures it evaluates. The proposal was pending before the National Assembly at the time of writing. p. 36

92 PACE Resolution 2352 (2020), para. 5; CM/Rec(2012)7, Appendix; UNESCO 1997 Recommendation, paras 17-21, 27 and 43-56; Working Group on Academic Freedom, Principles for Implementing the Right to Academic Freedom, UN Doc. A/HRC/56/CRP.2. p. 36

93 Council of Europe Education Department, *The Erosion of Academic Freedom in Europe* (2025), proposals for action; PACE Resolution 2352 (2020), para. 5; Committee of Ministers, Recommendation CM/Rec(2012)7; UNESCO 1997 Recommendation; Special Rapporteur on the right to education, A/HRC/56/58. p. 36

FEASIBILITY AND ADDED VALUE OF A COUNCIL OF EUROPE CONVENTION

FEASIBILITY QUESTION AND ASSESSMENT CRITERIA

94 ECHR, arts 6, 8, 10, 11, 13 and 14; Protocol No. 1 to the ECHR, art. 2; Protocol No. 4 to the ECHR, art. 2; CM/Rec(2012)7; UNESCO 1997 Recommendation, paras 17-21 and 27; Special Rapporteur on the right to education, A/HRC/56/58, paras 9, 17-23 and 49-60; PACE Resolution 2352 (2020), para. 5. p. 38

95 PACE Resolution 2352 (2020), paras 1-6; PACE Recommendation 2189 (2020), para. 5.2.4; CM/Rec(2012)7; Council of Europe, The New Democratic Pact for Europe in times of rupture: Report of the Secretary General of the Council of Europe (2026). p. 38

96 Threats to academic freedom and autonomy of higher education institutions in Europe, Reply to Recommendation, Doc. 15312 (8 June 2021) < https://pace.coe.int/en/files/29263/html>. p. 38

97 PACE Resolution 2352 (2020), para. 5; Committee of Ministers, Reply to Recommendation 2189 (2020), Doc. 15312, adopted at the 1405th meeting of the Ministers' Deputies, 3 June 2021, paras 7-8; Council of Europe Education Department, *The Erosion of Academic Freedom in Europe* (2025), proposals for action; Council of Europe Education Department, Academic Freedom in Action project materials, including conference, policy and Academic Freedom Insights materials, https://www.coe.int/en/web/education/academic-freedom-in-action. p. 38

AVAILABLE OPTIONS

98 CM/Rec(2012)7; UNESCO 1997 Recommendation, paras 17-21, 27, 43-49 and 56; EHEA, Rome Ministerial Communiqué, 19 November 2020, Annex I, Statement on Academic Freedom; EHEA, Statements on Fundamental Values, adopted at the Tirana Ministerial Conference (2024). p. 39

99 PACE Resolution 2352 (2020), para. 5; Council of Europe Education Department, *The Erosion of Academic Freedom in Europe* (2025), proposals for action concerning data and monitoring. p. 39

100 Scholars at Risk, Free to Think 2025, methodology note; Kinzelbach et al., Academic Freedom Index – 2026 Update, pp. 11-14; European University Association, University Autonomy in Europe IV: The Scorecard 2023; Council of Europe Education Department, *The Erosion of Academic Freedom in Europe* (2025). p. 39

101 Committee of Ministers, Recommendation CM/Rec(2007)6 on the public responsibility for higher education and research, adopted 16 May 2007; CM/Rec(2012)7; UNESCO 1997 Recommendation, paras 17-21 and 27; European University Association, University Autonomy in Europe IV: The Scorecard 2023. p. 39

ADDED VALUE OF A SPECIALISED HUMAN RIGHTS CONVENTION

102 UNESCO 1997 Recommendation, paras 43-49 and 56; ECHR, arts 6 and 13 where applicable; Working Group on Academic Freedom, Principles for Implementing the Right to Academic Freedom, A/HRC/56/CRP.2, Principle 2 and Appendix II, points 1, 2 and 4. p. 40

NOTES

103 UNESCO 1997 Recommendation, paras 43-49, 56 and 75; Working Group on Academic Freedom, Principles for Implementing the Right to Academic Freedom, A/HRC/56/CRP.2; PACE Resolution 2352 (2020), para. 5; Council of Europe Education Department, *The Erosion of Academic Freedom in Europe* (2025), proposals for action on legal safeguards, support mechanisms, data, monitoring and assistance; Council of Europe Convention for the Protection of the Profession of Lawyer, CETS No. 226, arts 10-15, as a comparator. **p. 40**

104 PACE Resolution 2352 (2020), paras 1-6; PACE Recommendation 2189 (2020); CM/Rec(2012)7; Council of Europe, The New Democratic Pact for Europe in times of rupture (2026). **p. 40**

SCOPE AND SUBSTANTIVE CONTENT OF A CONVENTION

105 Special Rapporteur on the right to education, A/HRC/56/58, paras 6-9; UNESCO 1997 Recommendation, para. 27; CESCR, General Comment No. 13, paras 38-40; CM/Rec(2012)7, Appendix, paras 3-7. **p. 41**

106 See Council of Europe/UNESCO, Code of Good Practice in the Provision of Transnational Education, revised 22 October 2025. **p. 41**

107 UNESCO 1997 Recommendation, para. 1(e) and paras 17-21 and 27; CESCR, General Comment No. 13, paras 38-40; CM/Rec(2012)7, Appendix, paras 3-7; Special Rapporteur on the right to education, A/HRC/56/58, paras 48-50. **p. 42**

108 UNESCO 1997 Recommendation, paras 24, 27, 29, 33 and 45-47; CESCR, General Comment No. 25, paras 13, 45-46 and 52; UNESCO, Recommendation on Science and Scientific Researchers, adopted 13 November 2017. **p. 42**

109 UNESCO 1997 Recommendation, paras 43-49, 56 and 72-74; Working Group on Academic Freedom, Principles for Implementing the Right to Academic Freedom, A/HRC/56/CRP.2. **p. 42**

110 PACE Resolution 2352 (2020), paras 9.3 and 11; Standards and Guidelines for Quality Assurance in the European Higher Education Area (ESG) (2015), standards 2.2-2.7 and 3.3; CoARA, Agreement on Reforming Research Assessment, 20 July 2022, commitments 1-4; DORA, General Recommendation 1 and Recommendations 2-5. **p. 42**

111 ECtHR, Telek and Others v. Türkiye; Protocol No. 4 to the ECHR, art. 2; Lisbon Recognition Convention, ETS No. 165, 11 April 1997; PACE Resolution 2509 (2023), paras 1, 8-14 and 17; Council of Europe Framework Convention on Artificial Intelligence and Human Rights, Democracy and the Rule of Law, CETS No. 225, arts 1, 5, 7 and 15. **p. 42**

OBLIGATIONS, SAFEGUARDS AND LIMITATIONS

112 ECHR, arts 1, 6 and 13; UNESCO 1997 Recommendation, paras 43-49 and 56; CM/Rec(2012)7, Appendix; Working Group on Academic Freedom, Principles for Implementing the Right to Academic Freedom, A/HRC/56/CRP.2. **p. 44**



NOTES

113 ECHR, arts 6 and 13 where applicable; UNESCO 1997 Recommendation, paras 46, 49 and 56; Working Group on Academic Freedom, Principles for Implementing the Right to Academic Freedom, A/HRC/56/CRP.2. **p. 44**

114 CM/Rec(2024)2 on countering the use of strategic lawsuits against public participation (SLAPPs), adopted 5 April 2024, Appendix, para. 1; CM/Rec(2014)7 on the protection of whistleblowers, adopted 30 April 2014. **p. 44**

115 ECHR, arts 8(2), 9(2), 10(2) and 11(2), and Protocol No. 4, art. 2(3)-(4); UNESCO 1997 Recommendation, paras 27 and 47. **p. 44**

MONITORING, IMPLEMENTATION AND FOLLOW-UP

116 PACE Resolution 2352 (2020), para. 5; Council of Europe Education Department, *The Erosion of Academic Freedom in Europe* (2025), proposals for action; Istanbul Convention, CETS No. 210, arts 66-70; Council of Europe Convention for the Protection of the Profession of Lawyer, CETS No. 226, arts 10-15. **p. 45**

117 Working Group on Academic Freedom, Principles for Implementing the Right to Academic Freedom, A/HRC/56/CRP.2; PACE Resolution 2352 (2020), para. 5. **p. 45**

118 Council of Europe Education Department, *The Erosion of Academic Freedom in Europe* (2025), proposals for action on support mechanisms, data and assistance. **p. 45**

119 CM/Rec(2016)4 on the protection of journalism and safety of journalists and other media actors, adopted 13 April 2016; Council of Europe Platform to promote the protection of journalism and safety of journalists. These are used here as comparators for alert and follow-up design. **p. 45**

RELATIONSHIP WITH EXISTING INSTRUMENTS AND AVOIDANCE OF DUPLICATION

120 ECHR, arts 6, 8, 10, 11, 13 and 14; Protocol No. 1 to the ECHR, art. 2; Protocol No. 4 to the ECHR, art. 2 (where applicable); ECtHR cases cited in section 3 above. **p. 46**

121 CM/Rec(2012)7; PACE Recommendation 1762 (2006); PACE Recommendation 2189 (2020); PACE Resolution 2352 (2020), especially para. 5; EHEA, Rome Ministerial Communiqué (2020), Annex I; EHEA Statements on Fundamental Values (2024); UNESCO 1997 Recommendation; Special Rapporteur on the right to education, A/HRC/56/58. **p. 46**

122 Council of Europe Framework Convention on Artificial Intelligence and Human Rights, Democracy and the Rule of Law, CETS No. 225; Council of Europe Convention for the Protection of the Profession of Lawyer, CETS No. 226; Tromsø Convention, CETS No. 205; Istanbul Convention, CETS No. 210. **p. 46**

ISSUES REQUIRING FURTHER CONSIDERATION IN DRAFTING AND PROCEDURAL RECOMMENDATION

123 Scholars at Risk, Free to Think 2025, sections on student expression and assembly; ECHR, arts 10 and 11; Protocol No. 1 to the ECHR, art. 2; Council of Europe Education Department, *The Erosion of Academic Freedom in Europe* (2025), chapter 6; CM/Rec(2010)7 on the Council of Europe Charter on Education for Democratic Citizenship and Human Rights Education. **p. 47**

124 Special Rapporteur on the right to education, A/HRC/56/58, paras 9-16 and 48-50; UNESCO 1997 Recommendation, paras 1(e), 17-21 and 27; CM/Rec(2012)7, Appendix; ECtHR, Mustafa Erdoğan and Others v Turkey, paras 40-41. **p. 47**

125 Council Recommendation of 23 May 2024 on enhancing research security, ST/9097/2024/INIT, OJ C, C/2024/3510, 30 May 2024; UNESCO, Recommendation on Science and Scientific Researchers (2017); PACE Resolution 2509 (2023); ECHR, art. 14; Protocol No. 4 to the ECHR, art. 2. **p. 47**

126 Scholars at Risk, Free to Think 2025, sections on student expression and assembly; Council of Europe Education Department, *The Erosion of Academic Freedom in Europe* (2025), chapter 6; Council of Europe Framework Convention on Artificial Intelligence and Human Rights, Democracy and the Rule of Law, CETS No. 225, arts 1, 5, 7 and 15. **p. 47**

127 ECHR, arts 6 and 13; UNESCO 1997 Recommendation, paras 43-49 and 56; Working Group on Academic Freedom, Principles for Implementing the Right to Academic Freedom, A/HRC/56/CRP.2. **p. 48**

128 PACE Recommendation 2189 (2020), para. 5.2.4; Committee of Ministers, Reply to Recommendation 2189 (2020), Doc. 15312, paras 7-8; Statute of the Council of Europe, art. 15.a; Council of Europe Education Department, *The Erosion of Academic Freedom in Europe* (2025), proposals for action. **p. 48**

129 PACE Resolution 2352 (2020), para. 5; CM/Rec(2012)7; UNESCO 1997 Recommendation, paras 17-21, 27 and 43-56; Special Rapporteur on the right to education, A/HRC/56/58, paras 9, 17-23 and 49-60; Council of Europe Convention for the Protection of the Profession of Lawyer, CETS No. 226, arts 10-15; Istanbul Convention, CETS No. 210, arts 66-70. **p. 48**



Education and Higher Education
at the Council of Europe

@CoE_Education

www.coe.int/education

ENG

www.coe.int

The Council of Europe is the continent's leading human rights organisation. It comprises 46 member states, including all members of the European Union. All Council of Europe member states have signed up to the European Convention on Human Rights, a treaty designed to protect human rights, democracy and the rule of law. The European Court of Human Rights oversees the implementation of the Convention in the member states.

COUNCIL OF EUROPE

CONSEIL DE L'EUROPE